4 Applied Instructions

In this chapter, we describe applied instruction's function of XC series PLC.

4-1. Table of Applied Instructions

4-2. Reading Method of Applied Instructions

4-3. Flow Instructions

4-4. Contactors Compare Instructions

4-5. Move Instructions

4-6. Arithmetic and Logic Operation Instructions

4-7. Loop and Shift Instructions

4-8. Data Convert

4-9. Floating Operation

4-10. Clock Operation

4-1. Applied Instruction List

Mnemonic	Function	Ladder chart	Chapter
Program Flow			
CJ	Condition jump	CJ Pn	4-3-1
CALL	Call subroutine	CALL Pn	4-3-2
SRET	Subroutine return	SRET	4-3-2
STL	Flow start	STL Sn	4-3-3
STLE	Flow end	S 1 ·	4-3-3
SET	Open the assigned flow, close the current flow	S ·	4-3-3
ST	Open the assigned flow, not close the current flow	D ·	4-3-3
FOR	Start a FOR-NEXT loop	D ·	4-3-4
NEXT	End of a FOR-NEXT loop	D ·	4-3-4
FEND	Main program END	D ·	4-3-5
END	Program END	END	4-3-5
Data Compare			
LD=	LD activates if (S1) = (S2)	S ·	4-4-1
LD>	LD activates if (S1) > (S2)	D ·	4-4-1
LD<	LD activates if (S1) =< (S2)	D ·	4-4-1
LD<>	LD activates if（S1）≠（S2）	D ·	4-4-1
LD<=	LD activates if（S1）≤（S2）	D ·	4-4-1
LD>=	LD activates if（S1）≥（S2）	LD>= S1 S2	4-4-1
AND=	AND activates if（S1）＝（S2）	AND= S1 S2	4-4-2

AND>	AND activates if (S1) > (S2)	AND> S1 S2	4-4-2
AND<	AND activates if (S1) < (S2)	AND< S1 S2	4-4-2
AND<>	AND activates if (S1) ≠ (S2)	AND<> S1 S2	4-4-2
AND<=	AND activates if (S1) ≤ (S2)	AND<= S1 S2	4-4-2
AND>=	AND activates if (S1) ≥ (S2)	X1 BMOV D10 D9 K3 X2 BMOV D10 D11 K3	4-4-2
OR=	OR activates if (S1) = (S2)	OR= S1 S2	4-4-3
OR>	OR activates if (S1) > (S2)	X0 PMOV S· D5 D· D10 n K3	4-4-3
OR<	OR activates if (S1) < (S2)	OR< S1 S2	4-4-3
OR<>	OR activates if (S1) ≠ (S2)	OR<> S1 S2	4-4-3
OR<=	OR activates if (S1) ≤ (S2)	X0 DFMOV S· D0 D· D10 n K3	4-4-3
OR>=	OR activates if (S1) ≥ (S2)	OR>= S1 S2	4-4-3
Data Move			
CMP	Compare the data	CMP S1 S D	4-5-1
ZCP	Compare the data in certain area	X2 FWRT S· D0 D1· FD0 D2· K3	4-5-2
MOV	Move	MOV S D	4-5-3
BMOV	Block move	X0 MSET D1· M10 D2· M120	4-5-4
PMOV	Transfer the Data block	D 2 ·	4-5-5
FMOV	Multi-points repeat move	D 1 ·	4-5-6
FWRT	Flash ROM written	D 2 ·	4-5-7
MSET	Zone set	D 1 ·	4-5-8
ZRST	Zone reset	D 2 ·	4-5-9
SWAP	Swap the high and low byte	D 1 ·	4-5-10

XCH	Exchange two values	X0 ZRST M500 M599 / ZRST D0 D100	4-5-11
Data Operation			
ADD	Addition	D 2 ·	4-6-1
SUB	Subtraction	D 1 ·	4-6-2
MUL	Multiplication	D 2 ·	4-6-3
DIV	Division	D 1 ·	4-6-4
INC	Increment	D 1 ·	4-6-5
DEC	Decrement	D 2 ·	4-6-5
MEAN	Mean	D 1 ·	4-6-6
WAND	Word And	WAND S1 S2 D	4-6-7
WOR	Word OR	WOR S1 S2 D	4-6-7
WXOR	Word exclusive OR	WXOR S1 S2 D	4-6-7
CML	Compliment	CML S D	4-6-8
NEG	Negative	NEG D	4-6-9
Data Shift			
SHL	Arithmetic Shift Left	SHL D n	4-7-1
SHR	Arithmetic Shift Right	SHR D n	4-7-1
LSL	Logic shift left	LSL D n	4-7-2
LSR	Logic shift right	LSR D n	4-7-2
ROL	Rotation shift left	ROL D n	4-7-3
ROR	Rotation shift right	ROR D n	4-7-3
SFTL	Bit shift left	SFTL S D n1 n2	4-7-4

SFTR	Bit shift right	SFTR S D n1 n2	4-7-5
WSFL	Word shift left	WSFL S D n1 n2	4-7-6
WSFR	Word shift right	WSFR S D n1 n2	4-7-7
Data Convert			
WTD	Single word integer converts to double word integer	WTD S D	4-8-1
FLT	16 bits integer converts to float point	FLT S D	4-8-2
DFLT	32 bits integer converts to float point	DFLT S D	4-8-2
FLTD	64 bits integer converts to float point	FLTD S D	4-8-2
INT	Float point converts to integer	INT S D	4-8-3
BIN	BCD converts to binary	BIN S D	4-8-4
BCD	Binary converts to BCD	BCD S D	4-8-5
ASCI	Hex. converts to ASCII	ASCI S D n	4-8-6
HEX	ASCII converts to Hex.	HEX S D n	4-8-7
DECO	Coding	DECO S D n	4-8-8
ENCO	High bit coding	ENCO S D n	4-8-9
ENCOL	Low bit coding	ENCOL S D n	4-8-10
Float Point Operation			
ECMP	Float compare	ECMP S1 S2 D	4-9-1
EZCP	Float Zone compare	EZCP S1 S2 D1 D2	4-9-2
EADD	Float Add	EADD S1 S2 D	4-9-3
ESUB	Float Subtract	ESUB S1 S2 D	4-9-4

EMUL	Float Multiplication	EMUL S1 S2 D	4-9-5
EDIV	Float division	EDIV S1 S2 D	4-9-6
ESQR	Float Square Root	ESQR S D	4-9-7
SIN	Sine	SIN S D	4-9-8
COS	Cosine	COS S D	4-9-9
TAN	Tangent	TAN S D	4-9-10
ASIN	Floating Sine	ASIN S D	4-9-11
ACOS	Floating Cosine	ACOS S D	4-9-12
ATAN	Floating Tangent	ATAN S D	4-9-13
Clock Operation			
TRD	Read RTC data	TRD D	4-10-1
TWR	Write RTC data	TWR D	4-10-2

4-2. Reading Method of Applied Instructions

In this manual, the applied instructions are described in the following manner.

1.Summary

ADDITION [ADD]			
16 bits	ADD	32 bits	DADD
Execution condition	Normally ON/OFF, Rising/Falling edge	Suitable Models	XC1.XC2.XC3.XC5.XCM
Hardware requirement	-	Software requirement	-

2.Operands

Operands	Function	Data Type
S1	Specify the augend data or register	16 bits/32 bits, BIN
S2	Specify the summand data or register	16 bits/32 bits, BIN
D	Specify the register to store the sum	16 bits/32 bits, BIN

3.Suitable Soft Components

Word

operands	System									Constant	Module	
	D	FD	ED	TD	CD	DX	DY	DM	DS	K/H	ID	QD
S1	●	●		●	●	●	●	●	●	●		
S2	●	●		●	●	●	●	●	●	●		
D	●	●		●	●		●	●	●			

Bit

Operands	System						
	X	Y	M	S	T	C	Dn.m

Description

<16 bits instruction>

(D10) + (D12) → (D14)

<32 bits instruction>

(D11D10) + (D13D12) → (D15D14)

- The data contained within the two source devices are combined and total is stored in the specified

destination device. Each data's highest bit is the sign bit, 0 stands for positive, 1 stand for negative. All calculations are algebraic processed. (5+(-8)= -3).

- If the result of a calculations is "0", the "0' flag acts. If the result exceeds 323,767(16 bits limit) or 2,147,483,648 (32 bits limit), the carry flag acts. (refer to the next page). If the result exceeds -323,768 (16 bits limit) or -2,147,483,648 (32 bits limit) , the borrow flag acts (Refer to the next page)
- When carry on 32 bits operation, word device's 16 bits are assigned, the device follow closely the preceding device's ID will be the high bits. To avoid ID repetition, we recommend you assign device's ID to be even ID.
- The same device may be used a source and a destination. If this is the case then the result changes after every scan cycle. Please note this point.

Related flag

Flag	Name	Function
M8020	Zero	ON：the calculate result is zero OFF：the calculate result is not zero
M8021	Borrow	ON：the calculate result is over 32767(16bits) or 2147483647(32bits) OFF：the calculate result is not over 32767(16bits) or 2147483647(32bits)
M8022	Carry	ON：the calculate result is over 32767(16bits) or 2147483647(32bits) OFF：the calculate result is not over 32767(16bits) or 2147483647(32bits)

The related description

- The assignment of the data
  The data register of XC series PLC is a single word (16 bit) data register, single word data only engross one data register which is assigned by single word object instruction. The disposal bound is: Dec. –327,68~327,67, Hex. 0000~FFFF.

Single word object instruction D(NUM)

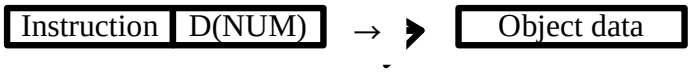

Double word（32 bit）engrosses two data register, it's composed by two consecutive data registers, the first one is assigned by double word object instruction. The dispose bound is: Dec. -214,748,364,8~214,748,364,7, Hex. 00000000~FFFFFFFF.

Double word object instruction D(NUM+1) D(NUM)

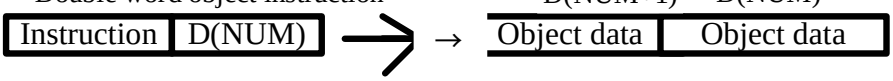

- The denote way of 32 bits instruction
  If an instruction can not only be 16 bits but also be 32 bits, then the denote method for 32 bits instruction is to add a "D" before 16 bits instruction.
  E.g：ADD D0 D2 D4 denotes two 16 bits data adds；
  DADD D10 D12 D14 denotes two 32 bits data adds

※1：Flag after executing the instruction. Instructions without the direct flag will not display.
※2：(S·) Source operand, its content won't change after executing the instruction
※3：(D·) Destinate operand, its content changes with the execution of the instruction
※4：Tell the instruction's basic action, using way, applied example, extend function, note items etc.

4-3. Program Flow Instructions

Mnemonic	Instruction's name	Chapter
CJ	Condition Jump	4-3-1
CALL	Call subroutine	4-3-2
SRET	Subroutine return	4-3-2
STL	Flow start	4-3-3
STLE	Flow end	4-3-3
SET	Open the assigned flow, close the current flow (flow jump)	4-3-3
ST	Open the assigned flow, not close the current flow (Open the new flow)	4-3-3
FOR	Start of a FOR-NEXT loop	4-3-4
NEXT	End of a FOR-NEXT loop	4-3-4
FEND	First End	4-3-5
END	Program End	4-3-5

4-3-1. Condition Jump [CJ]

1.Summary

As used to run a part of program, CJ shorten the operation cycle and using the dual coil

Condition Jump [CJ]			
16 bits	CJ	32 bits	-
Execution condition	Normally ON/OFF coil	Suitable Models	XC1.XC2.XC3.XC5.XCM
Hardware requirement	-	Software requirement	-

2.Operands

Operands	Function	Data Type
Pn	Jump to the target (with pointer Nr.) P (P0~P9999)	Pointer's Nr.

3.Suitable Soft Components

Other

Pointer	
P	I
●	

Description

In the below graph, if X000 is “ON”, jump from the first step to the next step behind P6 tag. If X000 “OFF”, do not execute the jump construction;

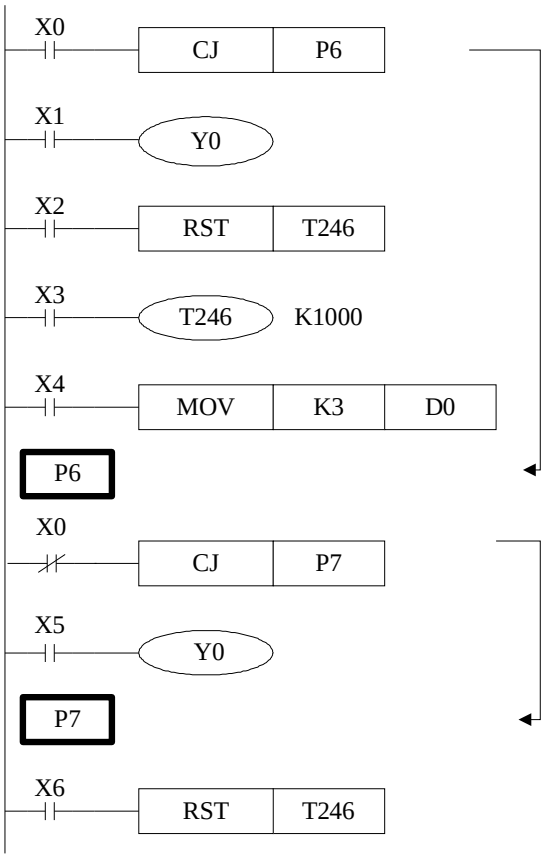

- In the left graph, Y000 becomes to be dual coil output, but when X000=OFF, X001 activates; when X000=ON, X005 activates
- CJ can't jump from one STL to another STL;
- After driving time T0~T640 and HSC C600~C640, if execute CJ, continue to work, the output activates.

4-3-2. Call subroutine **[CALL]** and Subroutine return **[SRET]**

1.Summary

Call the programs which need to be executed together, decrease the program's steps;

Subroutine Call [CALL]			
16 bits	CALL	32 bits	-
Execution condition	Normally ON/OFF, Rising/Falling edge	Suitable Models	XC1.XC2.XC3.XC5.XCM
Hardware requirement	-	Software requirement	-
Subroutine Return [SRET]			
16 bits	SRET	32 bits	-
Execution condition	-	Suitable Models	XC1.XC2.XC3.XC5.XCM
Hardware requirement	-	Software requirement	-

2.Operands

Operands	Function	Data Type
Pn	Jump to the target (with pointer Nr.) P (P0~P9999)	Pointer's Nr.

3.Suitable Soft Components

Others

Pointer	
P	I
●	

Description

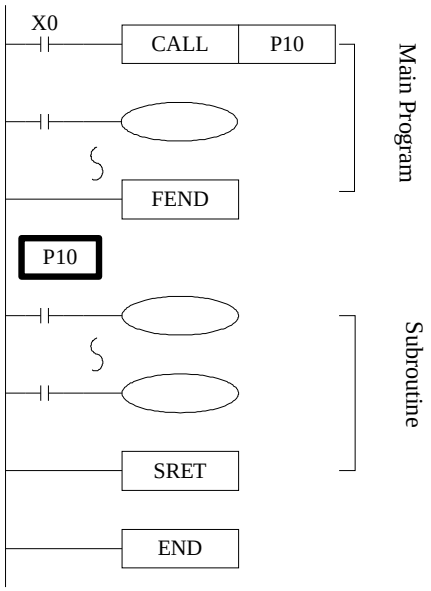

- If X000= “ON”, execute the call instruction and jump to the step tagged by P10. after executing the subroutine, return the original step via SRET instruction.Program the tag with FEND instruction (will describe this instruction later)
- In the subroutine 9 times call is allowed, so totally there can be 10 nestings.

4-3-3. Flow [SET].[ST] .[STL]. [STLE]

1、Summary

Instructions to specify the start, end, open, close of a flow;

Open the specified flow, close the local flow [SET]			
16 bits	SET	32 bits	-
Execution condition	Normally ON/OFF, Rising/Falling edge	Suitable Models	XC1.XC2.XC3.XC5.XCM
Hardware requirement	-	Software requirement	-
Open the specified flow, not close the local flow [ST]			
16 bits	ST	32 bits	-
Execution condition	Normally ON/OFF, Rising/Falling edge	Suitable Models	XC1.XC2.XC3.XC5.XCM
Hardware requirement	-	Software requirement	-
Flow starts [STL]			
16 bits	STL	32 bits	-

Execution condition	-	Suitable Models	XC1.XC2.XC3.XC5.XCM
Hardware requirement	-	Software requirement	-
Flow ends [STLE]			
16 bits	STLE	32 bits	-
Execution condition	-	Suitable Models	XC1.XC2.XC3.XC5.XCM
Hardware requirement	-	Software requirement	-

2.operands

Operands	Function	Data Type
Sn	Jump to the target flow S	Flow ID

3.Suitable Soft Components

Bit

Operands	System						
	X	Y	M	S	T	C	Dnm
Sn				●			

Description

- STL and STLE should be used in pairs. STL represents the start of a flow, STLE represents the end of a flow.
- After executing of **SET Sxxx** instruction, the flow specified by these instructions is ON.
- After executing **RST Sxxx** instruction, the specified flow is OFF.
- In flow S0, SET S1 close the current flow S0, open flow S1.
- In flow S0, ST S2 open the flow S2, but don’t close flow S0.
- When flow turns from ON to be OFF, reset OUT、PLS、PLF、not accumulate timer etc. which belongs to the flow.
- ST instruction is usually used when a program needs to run more flows at the same time.
- After executing of **SET Sxxx** instruction, the pulse instructions will be closed (including one-segment, multi-segment, relative or absolute, return to the origin)

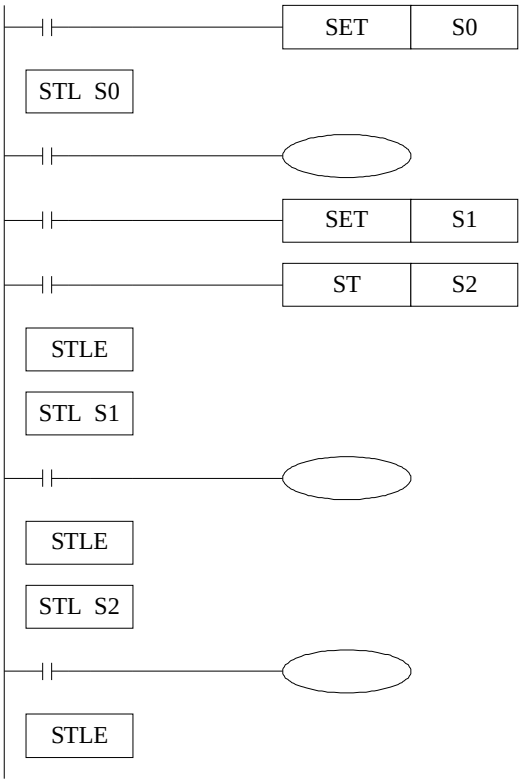
SET
S0
STL S0
SET
S1
ST
S2
STLE
STL S1
STLE
STL S2
STLE

4-3-4. [FOR] and [NEXT]

1.Summary

Loop execute the program between **FOR** and **NEXT** with the specified times;

Loop starts [FOR]			
16 bits	FOR	32 bits	-
Execution condition	Rising/Falling edge	Suitable Models	XC1.XC2.XC3.XC5.XCM
Hardware requirement	-	Software requirement	-
Loop ends [NEXT]			
16 bits	NEXTs	32 bits	-
Execution condition	Normally ON/OFF, Rising/Falling edge	Suitable Models	XC1.XC2.XC3.XC5.XCM
Hardware requirement	-	Software requirement	-

2.Operands

Operands	Function	Data Type
S	Program's loop times between FOR~NEXT	16 bits, BIN

3.Suitable Soft Components

Word

Operands	System									Constant	Module	
	D	FD	ED	TD	CD	DX	DY	DM	DS	K/H	ID	QD
S	●									●		

Description

- FOR.NEXT instructions must be programmed as a pair. Nesting is allowed, and the nesting level is 8.
- Between FOR/NEXT, LDP.LDF instructions are effective for one time. Every time when M0 turns from OFF to ON, and M1 turns from OFF to ON, [A] loop is executed 6 times.
- Every time if M0 turns from OFF to ON and M3 is ON, [B] loop is executed 5×7=35 times.
- If there are many loop times, the scan cycle will be prolonged. Monitor timer error may occur, please note this.
- If NEXT is before FOR, or no NEXT, or NEXT is behind FENG,END, or FOR and NEXT number is not equal, an error will occur.
- Between FOR~NEXT, CJ nesting is not allowed, also in one STL, FOR~NEXT must be programmed as a pair.

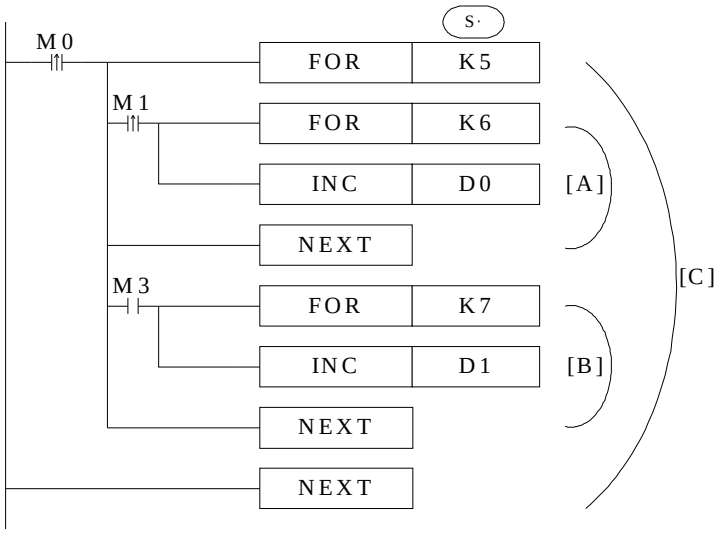

4-3-5. [FEND] and [END]

1.Summary

FEND means the main program ends, while END means program ends;

main program ends [FEND]			
Execution condition	-	Suitable Models	XC1.XC2.XC3.XC5.XCM
Hardware requirement	-	Software requirement	-
program ends [END]			
Execution condition	-	Suitable Models	XC1.XC2.XC3.XC5.XCM
Hardware requirement	-	Software requirement	-

2.Operands

Operands	Function	Data Type
None	-	-

3.Suitable Soft Components

None

Description

Even though [FEND] instruction represents the end of the main program, if execute this instruction, the function is same with END. Execute the output/input disposal, monitor the refresh of the timer, return to the 0th step.

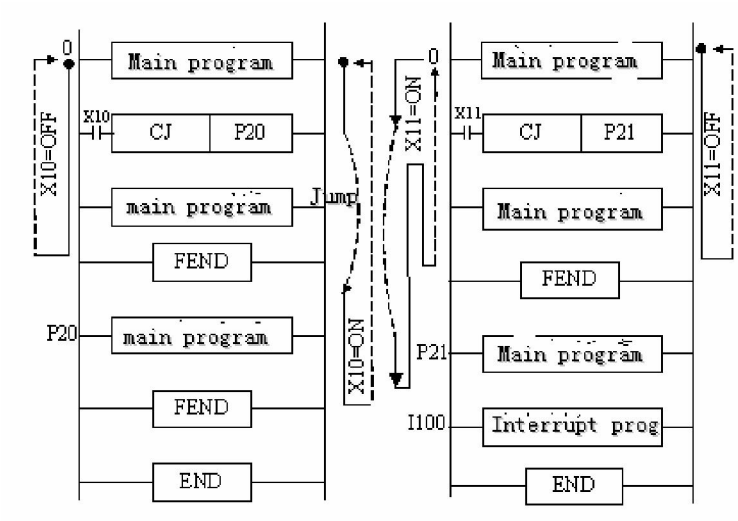

- If program the tag of CALL instruction behind FEND instruction, there must be SRET instruction. If the interrupt pointer program behind FEND instruction, there must be IRET instruction.
- After executing CALL instruction and before executing SRET instruction, if execute FEND instruction; or execute FEND instruction after executing FOR instruction and before executing NEXT, then an error will occur.
- In the condition of using many FEND instruction, please compile routine or subroutine between the last FEND instruction and END instruction.

4-4. Data compare function

Mnemonic	Function	Chapter
LD＝	LD activates when（S1)＝（S2)	4-4-1
LD＞	LD activates when（S1)＞（S2)	4-4-1
LD＜	LD activates when（S1)＜（S2)	4-4-1
LD＜＞	LD activates when（S1)≠（S2)	4-4-1
LD＜＝	LD activates when（S1)≤（S2)	4-4-1
LD＞＝	LD activates when（S1)≥（S2)	4-4-1
AND＝	AND activates when（S1)＝（S2)	4-4-2
AND＞	AND activates when（S1)＞（S2)	4-4-2
AND＜	AND activates when（S1)＜（S2)	4-4-2
AND＜＞	AND activates when（S1)≠（S2)	4-4-2
AND＜＝	AND activates when（S1)≤（S2)	4-4-2
AND＞＝	AND activates when（S1)≥（S2)	4-4-2

OR＝	OR activates when（S1)＝（S2)	4-4-3
OR＞	OR activates when（S1)＞（S2)	4-4-3
OR＜	OR activates when（S1)＜（S2)	4-4-3
OR＜＞	OR activates when（S1)≠（S2)	4-4-3
OR＜＝	OR activates when（S1)≤（S2)	4-4-3
OR＞＝	OR activates when（S1)≥（S2)	4-4-3

4-4-1. LD Compare [LD□]

1. Summary

LD□ is the point compare instruction connected with the generatrix.

LD Compare [LD□]			
16 bits	As below	32 bits	As below
Execution condition	-	Suitable Models	XC1.XC2.XC3.XC5.XCM
Hardware requirement	-	Software requirement	-

2.Operands

Operands	Function	Data Type
S1	Specify the Data (to be compared) or soft component's address code	16/32bits, BIN
S2	Specify the comparand's value or soft component's address code	16/32 bits, BIN

3.Suitable soft components

Word

Operands	System									Constant	Module	
	D	FD	ED	TD	CD	DX	DY	DM	DS	K/H	ID	QD
S1	●	●		●	●	●	●	●	●	●		
S2	●	●		●	●	●	●	●	●	●		

Description

16 bits instruction	32 bits instruction	Activate Condition	Not Activate Condition
LD＝	DLD＝	（S1)＝（S2)	（S1)≠（S2)
LD＞	DLD＞	（S1)＞（S2)	（S1)≤（S2)

LD＜	DLD＜	(S1)＜(S2)	(S1)≥(S2)
LD＜＞	DLD＜＞	(S1)≠(S2)	(S1)＝(S2)
LD＜＝	DLD＜＝	(S1)≤(S2)	(S1)＞(S2)
LD＞＝	DLD＞＝	(S1)≥(S2)	(S1)＜(S2)

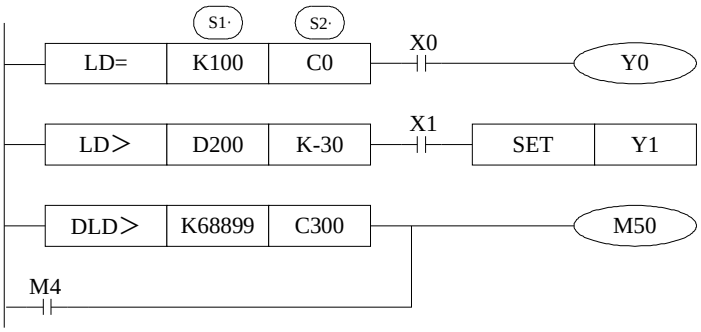

Note Items

- When the source data's highest bit (16 bits：b15，32 bits：b31) is 1，use the data as a negative.
- The comparison of 32 bits counter (C300~) must be 32 bits instruction. If assigned as a 16 bits instruction, it will lead the program error or operation error.

4-4-2．AND Compare [AND□]

1.Summary

AND□: The compare instruction to serial connect with the other contactors.

AND Compare [AND□]			
16 bits	As Below	32 bits	As Below
Execution condition	Normally ON/OFF coil	Suitable Models	XC1.XC2.XC3.XC5.XCM
Hardware requirement	-	Software requirement	-

2.Operands

Operands	Function	Data Type
S1	Specify the Data (to be compared) or soft component's address code	16/32bit,BIN
S2	Specify the comparand's value or soft component's address code	16/32bit,BIN

3.suitable soft components

Word	Operands	System									Konstant	Module	
		D	FD	ED	TD	CD	DX	DY	DM	DS	K/H	ID	QD
	S1	●	●		●	●	●	●	●	●	●		
	S2	●	●		●	●	●	●	●	●	●		

Description

16 bits instruction	32 bits instruction	Activate Condition	Not Activate Condition
AND＝	DAND＝	(S1)＝(S2)	(S1)≠(S2)
AND＞	DAND＞	(S1)＞(S2)	(S1)≤(S2)
AND＜	DAND＜	(S1)＜(S2)	(S1)≥(S2)
AND＜＞	DAND＜＞	(S1)≠(S2)	(S1)＝(S2)
AND＜＝	DAND＜＝	(S1)≤(S2)	(S1)＞(S2)
AND＞＝	DAND＞＝	(S1)≥(S2)	(S1)＜(S2)

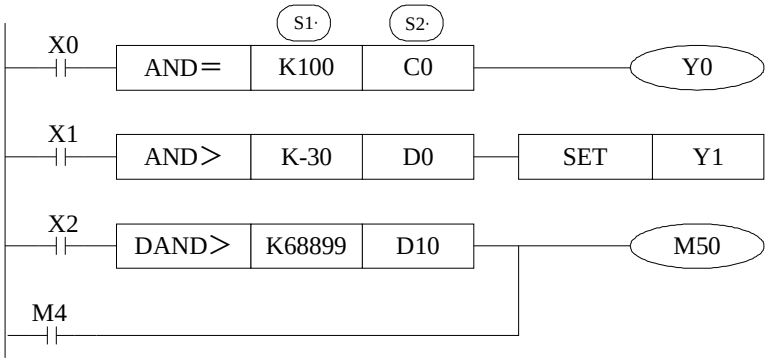

Note Items

- When the source data's highest bit (16 bits：b15，32 bits：b31) is 1，use the data as a negative.
- The comparison of 32 bits counter (C300~) must be 32 bits instruction. If assigned as a 16 bits instruction, it will lead the program error or operation error.

4-4-3．Parallel Compare [OR□]

1. Summary

OR□ The compare instruction to parallel connect with the other contactors

Parallel Compare [OR□]			
16 bits	As below	32 bits	As below
Execution	-	Suitable	XC1.XC2.XC3.XC5.XCM

condition		Models	
Hardware requirement	-	Software requirement	-

2. Operands

Operands	Function	Data Type
S1	Specify the Data (to be compared) or soft component's address code	16/32 bit,BIN
S2	Specify the comparand's value or soft component's address code	16/32 bit,BIN

3. suitable soft components

Word

Operands	System									Constant	Module	
	D	FD	ED	TD	CD	DX	DY	DM	DS	K/H	ID	QD
S1	●	●		●	●	●	●	●	●	●		
S2	●	●		●	●	●	●	●	●	●		

Description

16 bits instruction	32 bits instruction	Activate Condition	Not Activate Condition
OR＝	DOR＝	(S1)＝(S2)	(S1)≠(S2)
OR＞	DOR＞	(S1)＞(S2)	(S1)≤(S2)
OR＜	DOR＜	(S1)＜(S2)	(S1)≥(S2)
OR＜＞	DOR＜＞	(S1)≠(S2)	(S1)＝(S2)
OR＜＝	DOR＜＝	(S1)≤(S2)	(S1)＞(S2)
OR＞＝	DOR＞＝	(S1)≥(S2)	(S1)＜(S2)

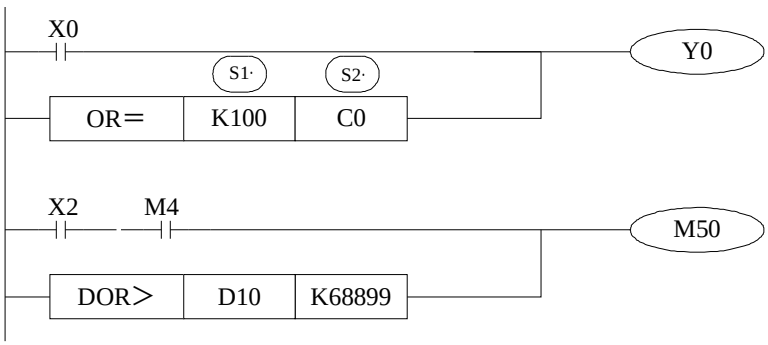

Note Items

- When the source data's highest bit (16 bits：b15，32 bits：b31) is 1，use the data as a negative.
- The comparison of 32 bits counter (C300~) must be 32 bits instruction. If assigned as a 16 bits instruction, it will lead the program error or operation error.

4-5．Data Move

Mnemonic	Function	Chapter
CMP	Data compare	4-5-1
ZCP	Data zone compare	4-5-2
MOV	Move	4-5-3
BMOV	Data block move	4-5-4
PMOV	Data block move (with faster speed)	4-5-5
FMOV	Fill move	4-5-6
FWRT	FlashROM written	4-5-7
MSET	Zone set	4-5-8
ZRST	Zone reset	4-5-9
SWAP	The high and low byte of the destinated devices are exchanged	4-5-10
XCH	Exchange	4-5-11

4-5-1. Data Compare [CMP]

1. Summary

Compare the two specified Data, output the result.

Data compare [CMP]			
16 bits	CMP	32 bits	DCMP
Execution condition	Normally ON/OFF, rising/falling edge	Suitable Models	XC1.XC2.XC3.XC5.XCM
Hardware requirement	-	Software requirement	-

2. Operands

Operands	Function	Data Type
S1	Specify the data (to be compared) or soft component's address code	16 bit,BIN
S	Specify the comparand's value or soft component's address code	16 bit,BIN
D	Specify the compare result's address code	bit

3. Suitable soft component

Word

Operands	System									Constant	Module	
	D	FD	ED	TD	CD	DX	DY	DM	DS	K/H	ID	QD
S1	●	●		●	●	●	●	●	●	●		
S	●	●		●	●	●	●	●	●	●		

Bit

Operands	System						
	X	Y	M	S	T	C	Dn.m
D		●	●	●			

Description

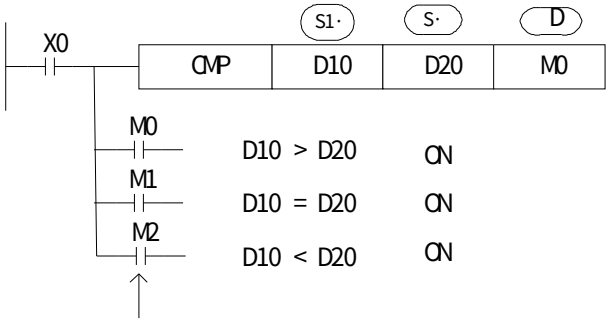

Even X000=OFF to stop ZCP instruction, M0~M2 will keep the original status

- Compare data (S1·) and (S·), output the three points' ON/OFF status (start with (D·)) according to the value

l (D·),(D·) +1, (D·) +2 ：the three point's on/off output according to the valve

4-5-2. Data zone compare [ZCP]

1. Summary

Compare the two specify Data with the current data, output the result.

Data Zone compare [ZCP]			
16 bits	ZCP	32 bits	DZCP
Execution condition	Normally ON/OFF, rising/falling edge	Suitable Models	XC1.XC2.XC3.XC5.XCM
Hardware requirement	-	Software requirement	-

2. Operands

Operands	Function	Data Type
S1	Specify the down-limit Data (of the compare stand) or soft component's address code	16 bit, BIN
S2	Specify the Up-limit Data (of the compare stand) or soft component's address code	16 bit, BIN
S	Specify the current data or soft component's address code	16 bit, BIN
D	Specify the compare result's data or soft component's address code	bit

3.Suitable soft components

Word

Operands	System									Constant	Module	
	D	FD	ED	TD	CD	DX	DY	DM	DS	K/H	ID	QD
S1	●	●		●	●	●	●	●	●	●		
S2	●	●		●	●	●	●	●	●	●		
S	●	●		●	●	●	●	●	●	●		

Bit

Operands	System						
	X	Y	M	S	T	C	Dn.m
D		●	●	●			

Description

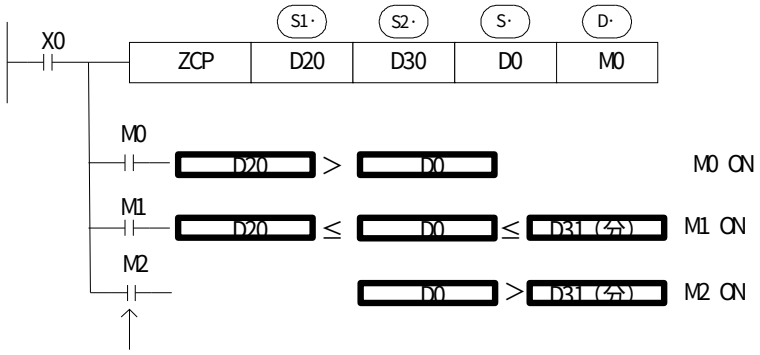

Even X000=OFF stop ZCP instruction，M0~M2 will keep the original status

- Compare (S·) data with (S1) and (S2) , (D·) output the three point's ON/OFF status according to the zone size.
- (D·) , (D·) +1, (D·) +2 : the three point's ON/OFF output according to the result

4-5-3. MOV [MOV]

1. Summary

Move the specified data to the other soft components

MOV [MOV]			
16 bits	MOV	32 bits	DMOV
Execution condition	Normally ON/OFF, rising/falling edge	Suitable Models	XC1.XC2.XC3.XC5.XCM
Hardware requirement	-	Software requirement	-

2. Operands

Operands	Function	Data Type
S	Specify the source data or register's address code	16 bit/32 bit, BIN
D	Specify the target soft component's address code	16 bit/32 bit, BIN

3. Suitable soft component

Word

Operands	System									Constant	Module	
	D	FD	ED	TD	CD	DX	DY	DM	DS	K/H	ID	QD
S	●	●	●	●	●	●	●	●	●	●		
D	●		●	●	●		●	●	●			

Description

- Move the source data to the target
- When X000 is off, the data keeps same
- Convert constant K10 to be BIN code automatically

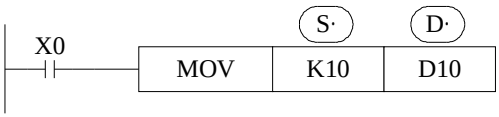

<read the counter's or time's current value>

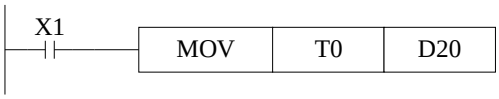

(The current value of T0)→(D20)

The same as counter

<indirectly specify the counter's ,time's set value>

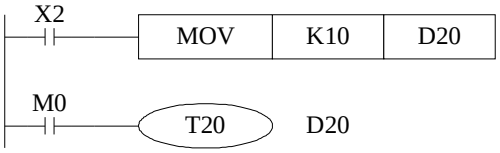

(K10) (D10)

D20=K10

< Move the 32bits data >

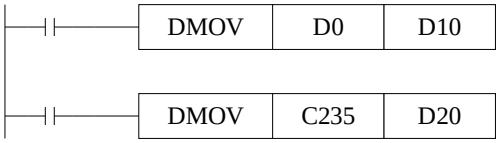

(D1，D0)→(D11，D10)

(the current value of C235)→(D21，D20)

Please use DMOV when the value is 32 bits, such as MUL instruction, high speed counter…

4-5-4. Data block Move [BMOV]

1. Summary

Move the specified data block to

Data block move [BMOV]			
16 bits	BMOV	32 bits	-
Execution condition	Normally ON/OFF coil	Suitable Models	XC1.XC2.XC3.XC5.XCM
Hardware requirement	-	Software requirement	-

2. Operands

Operands	Function	Data Type
S	Specify the source data block or soft component address code	16 bits, BIN; bit
D	Specify the target soft components address code	16 bits, BIN; bit
n	Specify the move data's number	16 bits, BIN;

3. Suitable soft components

Word

Operands	System									Constant	Module	
	D	FD	ED	TD	CD	DX	DY	DM	DS	K/H	ID	QD
S	●	●	●	●	●	●	●	●	●			
D	●		●	●	●		●	●	●			
n	●			●	●	●		●	●	●		

Bit

Operands	System						
	X	Y	M	S	T	C	Dn.m
S	●	●	●				
D	●	●	●				

Description

l Move the specified "n" data to the specified "n" soft components in the form block.

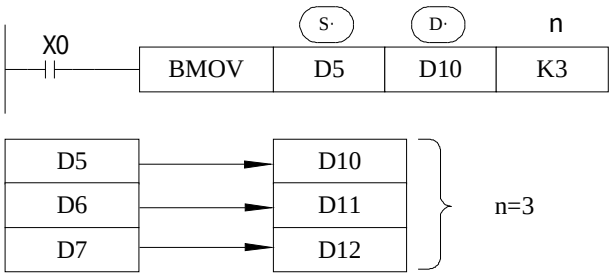

l As the following picture, when the data address overlapped, the instruction will do from 1 to 3.

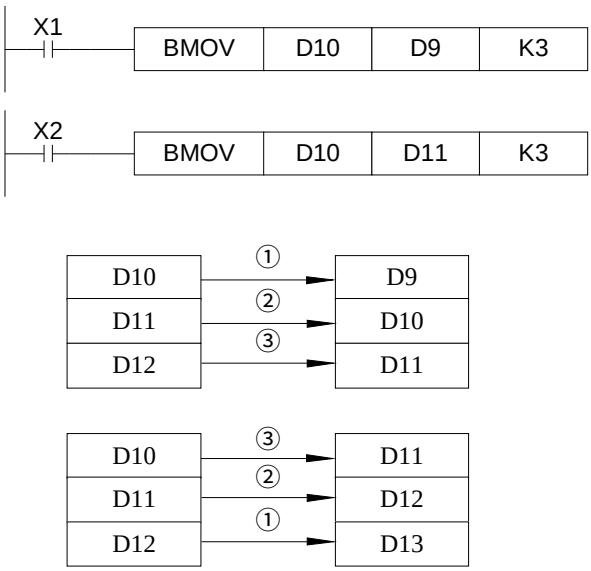

4-5-5. Data block Move [PMOV]

1. Summary

Move the specified data block to the other soft components

Data block mov[PMOV]			
16 bits	PMOV	32 bits	-
Execution condition	Normally ON/OFF coil	Suitable Models	XC1.XC2.XC3.XC5.XCM
Hardware requirement	-	Software requirement	-

2. Operands

Operands	Function	Data Type
S	Specify the source data block or soft component address code	16 bits, BIN; bit
D	Specify the target soft components address code	16 bits, BIN; bit
n	Specify the move data's number	16 bits, BIN;

3. Suitable soft components

Word

Operands	System									Constant	Module	
	D	FD	ED	TD	CD	DX	DY	DM	DS	K/H	ID	QD
S	●	●	●	●	●	●	●	●	●			
D	●		●	●	●		●	●	●			
n	●			●	●		●	●	●	●		

Bit

Operands	system						
	X	Y	M	S	T	C	Dn.m
S	●	●	●				
D	●	●	●				

Description

l Move the specifed "n" data to the specified "n" soft components in form of block

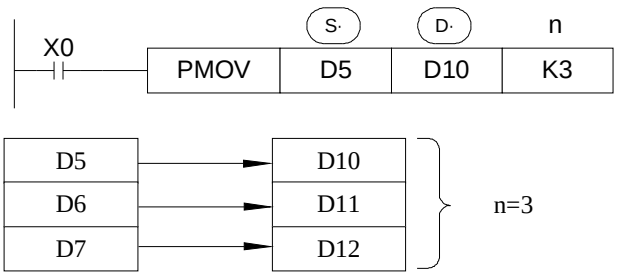

- The function of PMOV and BMOV is mostly the same, but the PMOV has the faster speed
- PMOV finish in one scan cycle, when executing PMOV , close all the interruptions
- Mistake many happen, if there is a repeat with source address and target address

4-5-6. Fill Move [FMOV]

1. Summary

Move the specified data block to the other soft components

Fill Move [FMOV]			
16 bits	FMOV	32 bits	DFMOV
Execution condition	Normally ON/OFF, rising/falling edge	Suitable Models	XC1.XC2.XC3.XC5.XCM
Hardware requirement	DFMOV need above V3.0	Software requirement	-

2. Operands

Operands	Function	Data Type
S	Specify the source data block or soft component address code	16 bits, BIN; bit
D	Specify the target soft components address code	16 bits, BIN; bit
n	Specify the move data's number	16 bits, BIN;

3. Suitable soft component

Word

Operands	System									Constant	Module	
	D	FD	ED	TD	CD	DX	DY	DM	DS	K/H	ID	QD
S	●	●	●	●	●	●	●	●	●	●		
D	●		●	●	●		●	●	●			
n	●			●	●		●	●	●	●		

Description

<16 bits instruction>

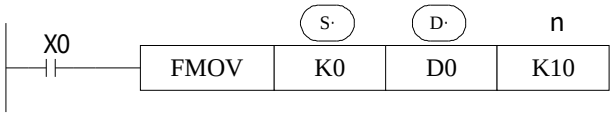

- Move K0 to D0~D9, copy a single data device to a range of destination device
- The data stored in the source device (S) is copied to every device within the destination range, The range is specified by a device head address (D) and a quantity of consecutive elements (n).
- If the specified number of destination devices (n) exceeds the available space at the destination location, then only the available destination devices will be written to.

<32 bits instruction >

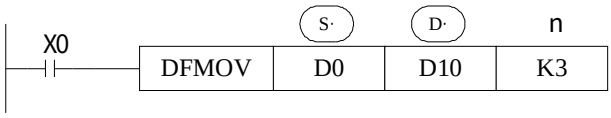

- Move D0.D1 to D10.D11:D12.D13:D14.D15.

<16 bits Fill Move >

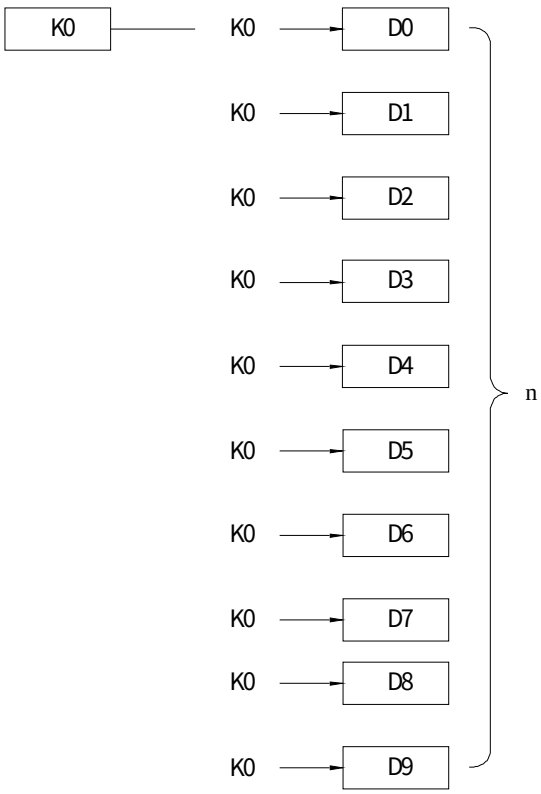

<32 bits Fill move>

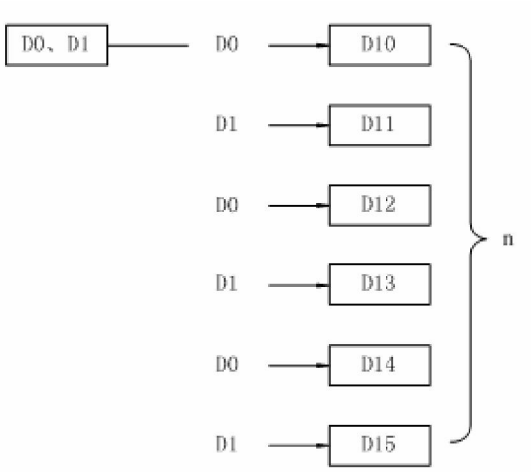

4-5-7. FlashROM Write [FWRT]

1. Summary

Write the specified data to other soft components

FlashROM Write [FWRT]			
16 bits	FWRT	32 bits	DFWRT
Execution condition	rising/falling edge	Suitable Models	XC1.XC2.XC3.XC5.XCM
Hardware requirement	-	Software requirement	-

2. Operands

Operands	Function	Data Type
S	The data write in the source or save in the soft element	16 bits/32 bits, BIN
D	Write in target soft element	16 bits/32 bits, BIN
D1	Write in target soft element start address	16 bits/32 bits, BIN
D2	Write in data quantity	bit

3. Suitable soft components

Word

Operands	System									Constant	Module	
	D	FD	ED	TD	CD	DX	DY	DM	DS	K/H	ID	QD
S	●	●		●	●	●	●	●	●	●		
D		●										
D1		●										
D2	●			●	●	●	●	●	●	●		

Description

< Written of a word >

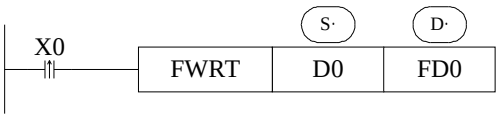

Write value in D0 into FD0

<Written of double word>

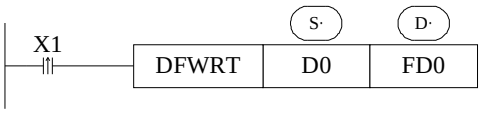

Write value in D0,D1 into FD0,FD1

<Written of multi-word>

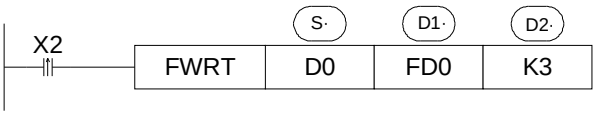

Write value in D0,D1,D2 into FD0,FD1,FD2

※1：FWRT instruction only allow to write data into FlashRom register. In this storage, even battery drop, data could be used to store important technical parameters

※2：Written of FWRT needs a long time, about 150ms, so frequently operate this operate this operate operation is

recommended

※3：The written time of Flshrom is about 1,000,000 times. So we suggest using edge signal (LDP, LDF etc.) to trigger.

※4：Frequently written of FlashROM

4-5-8. Zone set [MSET]

1. Summary

Set or reset the soft element in certain range

Multi-set [MSET]			
16 bits	MSET.ZRST	32 bits	-
Execution condition	Normally ON/OFF	Suitable Models	XC1.XC2.XC3.XC5.XCM
Hardware requirement	-	Software requirement	-

2. Operands

Operands	Function	Data Type
D1	Start soft element address	bit
D2	End soft element address	bit

3. Suitable soft components

Bit

Operands	System						
	X	Y	M	S	T	C	Dn.m
D1	●	●	●	●	●	●	
D2	●	●	●	●	●	●	

Description

Zone set unit M10~M120

- (D1·) (D2·) Are specified as the same type of soft units, and (D1·) < (D2·)
- When (D1·) > (D2·) , will not run Zone set, set M8004.M8067, and D8067=2。

4-5-9. Zone reset [ZRST]

1. Summary

Reset the soft element in the certain range

Multi-reset [ZRST]			
16 bits	ZRST	32 bits	-
Execution condition	Normally ON/OFF	Suitable Models	XC1.XC2.XC3.XC5.XCM
Hardware requirement	-	Software requirement	-

2. Operands

Operands	Function	Data Type
D1	Start address of soft element	Bit:16 bits,BIN
D2	End address of soft element	Bit:16 bits,BIN

3. Suitable soft components

Word

Operands	System									Constant	Module	
	D	FD	ED	TD	CD	DX	DY	DM	DS	K/H	ID	QD
D1	●					●	●	●				
D2	●				●	●	●	●				

Bit

Operands	System						
	X	Y	M	S	T	C	Dn.m
D1	●	●	●	●	●	●	
D2	●	●	●	●	●	●	

Description

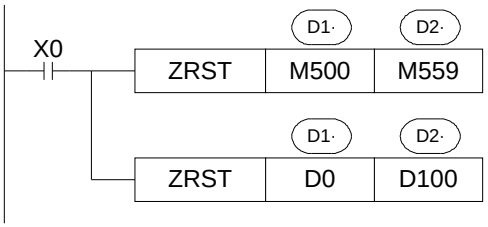

Zone reset bits M5 00~M559。

Zone reset words D0~D100

- (D1·) (D2·) Are specified as the same type of soft units, and (D1·) < (D2·)
- When (D1·) > (D2·) only reset the soft unit specified in (D1·), and set M8004.M8067，D8067=2。

Other Reset Instruction

- As soft unit's separate reset instruction, RST instruction can be used to bit unit Y, M, S and word unit T, C, D
- As fill move for constant K0, 0 can be written into DX, DY, DM, DS, T, C, D.

4-5-10. Swap the high and low byte [SWAP]

1. Summary

Swap the high and low byte

High and low byte swap [SWAP]			
16 bits	SWAP	32 bits	-
Execution condition	Normally ON/OFF	Suitable Models	XC1.XC2.XC3.XC5.XCM
Hardware requirement	-	Software requirement	-

2. Operands

Operands	Function	Data Type
S	The address of the soft element	16 bits: BIN

3. Suitable soft components

Word

Operands	System									Constant	Module	
	D	FD	ED	TD	CD	DX	DY	DM	DS	K/H	ID	QD
S	●			●	●							

Description

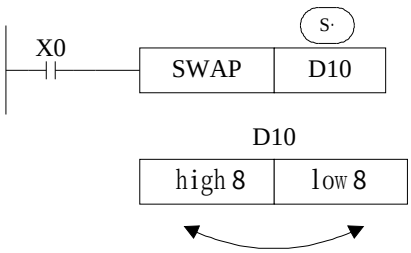

- Low 8 bits and high 8 bits change when it is 16 bits instruction.
- If the instruction is a consecutive executing instruction, each operation cycle should change.

4-5-11. Exchange [XCH]

1. Summary

Exchange the data in two soft element

Exchange [XCH]			
16 bits	XCH	32 bits	DXCH
Execution condition	Normally ON/OFF	Suitable Models	XC1.XC2.XC3.XC5.XCM
Hardware requirement	-	Software requirement	-

2. Operands

Operands	Function	Data Type
D1	The soft element address	16 bits, BIN
D2	The soft element address	16 bits, BIN

3. Suitable soft component

Word

Operands	System									Constant	Module	
	D	FD	ED	TD	CD	DX	DY	DM	DS	K/H	ID	QD
D1	●			●	●		●	●	●			
D2	●			●	●		●	●	●			

Description

<16 bits instruction>

Before（D10）=100 →After （D10）=101

（D11）=101 （D11）=100

- The contents of the two destination devices D1 and D2 are swapped,
- When drive input X0 is ON, each scan cycle should carry on data exchange, please note.

<32 bits instruction >

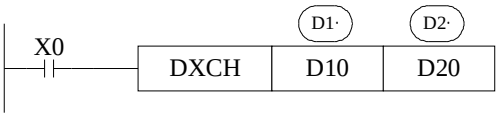

- 32 bits instruction [DXCH] swaps value composed by D10、D11 and the value composed by D20、D21.

4-6. Data Operation Instructions

Mnemonic	Function	Chapter
ADD	Addition	4-6-1
SUB	Subtraction	4-6-2
MUL	Multiplication	4-6-3
DIV	Division	4-6-4
INC	Increment	4-6-5
DEC	Decrement	4-6-5
MEAN	Mean	4-6-6
WAND	Logic Word And	4-6-7
WOR	Logic Word Or	4-6-7
WXOR	Logic Exclusive Or	4-6-7
CML	Compliment	4-6-8
NEG	Negation	4-6-9

4-6-1 Addition [ADD]

1. Summary

Add two numbers and store the result

Add [ADD]			
16 bits	ADD	32 bits	DADD
Execution condition	Normally ON/OFF	Suitable Models	XC1.XC2.XC3.XC5.XCM
Hardware requirement	-	Software requirement	-

2. Operands

Operands	Function	Data Type
S1	The number address	16 bit/32 bit, BIN
S2	The number address	16 bit/32bit, BIN
D	The result address	16 bit/32bit, BIN

3. Suitable soft components

Word

Operands	System									Constant	Module	
	D	FD	ED	TD	CD	DX	DY	DM	DS	K/H	ID	QD
S1	●	●		●	●	●	●	●	●	●		
S2	●	●		●	●	●	●	●	●	●		
D	●			●	●		●	●	●			

Description

（D10）＋（D12）→（D14）

- The data contained within the two source devices are combined and the total is stored in the specified destination device. Each data's highest bit is the sign bit, 0 stands for positive、1 stands for negative. All calculations are algebraic processed.（5+（-8）=-3）
- If the result of a calculation is "0", the "0" flag acts. If the result exceeds 323，767（16 bits limit）or 2,147,483,647（32 bits limit）, the carry flag acts.（refer to the next page）. If the result exceeds –323,768（16 bits limit）or –2,147,483,648（32 bits limit）, the borrow flag acts（Refer to the next page。
- When carry on 32 bits operation, word device's low 16 bits are assigned, the device following closely the preceding device's ID will be the high bits. To avoid ID repetition, we recommend you assign device's ID to be even ID.
- The same device may be used as a source and a destination. If this is the case then the result changes after every scan cycle. Please note this point.

Related flag

Flag meaning

Flag	Name	Function
M8020	Zero	ON：the calculate result is zero OFF：the calculate result is not zero
M8021	Borrow	ON：the calculate result is less than -32768(16 bit) or -2147483648(32bit) OFF：the calculate result is over -32768(16 bit) or -2147483648(32bit)
M8022	Carry	ON：the calculate result is over 32768(16 bit) or 2147483648(32bit) OFF：the calculate result is less than 32768(16 bit) or 2147483648(32bit)

4-6-2. Subtraction [SUB]

1. Summary

Sub two numbers, store the result

Subtraction [SUB]			
16 bits	SUB	32 bits	DSUB
Execution condition	Normally ON/OFF	Suitable Models	XC1.XC2.XC3.XC5.XCM
Hardware requirement	-	Software requirement	-

2.Operands

Operands	Function	Data Type
S1	The number address	16 bits /32 bits,BIN
S2	The number address	16 bits /32 bits,BIN
D	The result address	16 bits /32 bits,BIN

3.Suitable soft component

Word	Operands	System									Constant	Module	
		D	FD	ED	TD	CD	DX	DY	DM	DS	K/H	ID	QD
	S1	●	●		●	●	●	●	●	●	●		
	S2	●	●		●	●	●	●	●	●	●		
	D	●			●	●		●	●	●			

Description

(D10) — (D12) → (D14)

- S1· appoint the soft unit's content, subtract the soft unit's content appointed by S2· in the format of algebra. The result will be stored in the soft unit appointed by D·. (5-(-8)=13)
- The action of each flag, the appointment method of 32 bits operation's soft units are both the same with the preceding ADD instruction.
- The importance is: in the preceding program, if X0 is ON, SUB operation will be executed every scan cycle

The relationship of the flag's action and vale's positive/negative is shown below:

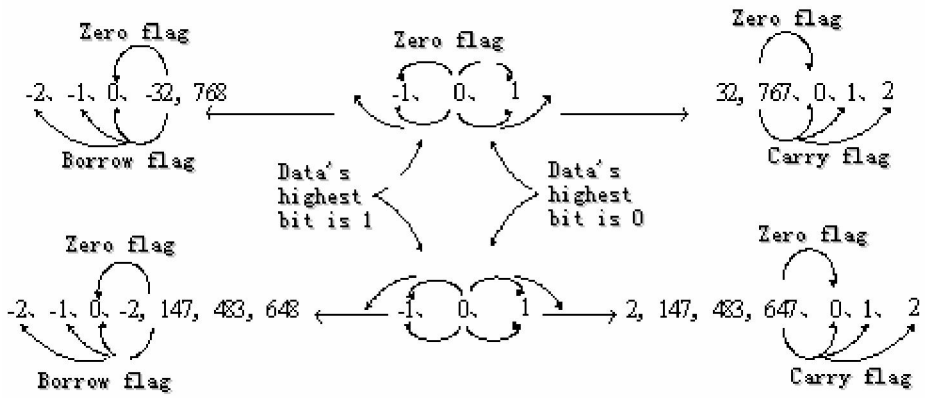

4-6-3. Multiplication [MUL]

1. Summary

Multiply two numbers, store the result

Multiplication [MUL]			
16 bits	MUL	32 bits	DMUL
Execution condition	Normally ON/OFF	Suitable Models	XC1.XC2.XC3.XC5.XCM
Hardware requirement	-	Software requirement	-

2. Operands

Operands	Function	Data Type
S1	The number address	16 bits/32bits,BIN
S2	The number address	16 bits/32bits,BIN
D	The result address	16 bits/32bits,BIN

3. Suitable soft component

Word

Operands	System									Constant	Module	
	D	FD	ED	TD	CD	DX	DY	DM	DS	K/H	ID	QD
S1	●	●		●	●	●	●	●	●	●		
S2	●	●		●	●	●	●	●	●	●		
D	●			●	●		●	●	●			

Description

<16 bits Operation>

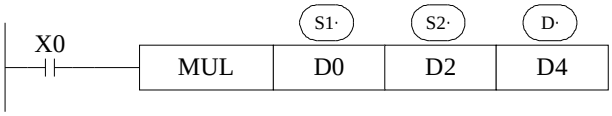

BIN (D0) × BIN (D2) → BIN (D5，D4)
16 bits 16 bits → 32 bits

- The contents of the two source devices are multiplied together and the result is stored at the destination device in the format of 32 bits. As in the upward chart: when (D0)=8、(D2)=9, (D5, D4) =72.
- The result's highest bit is the symbol bit: positive (0)、negative (1).
- When be bit unit, it can carry on the bit appointment of K1~K8. When appoint K4, only the result's low 16 bits can be obtained.

<32 bits Operation >

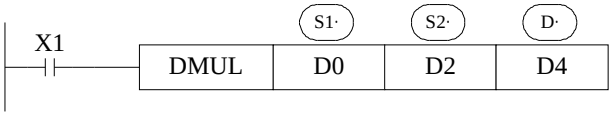

BIN (D1，D0) × BIN (D3，D2) → BIN (D7，D6，D5，D4)
32 bits 32 bits → 64 bits

- When use 2 bits Operation ,the result is stored at the destination device in the format of 64 bits.
- Even use word device, 64 bits results can't be monitored at once.

4-6-4．Division [DIV]

1. Summary

Divide two numbers and store the result

Division [DIV]			
16 bits	DIV	32 bits	DDIV
Execution condition	Normally ON/OFF, rising/falling edge	Suitable Models	XC1.XC2.XC3.XC5.XCM
Hardware requirement	-	Software requirement	-

2. Operands

Operands	Function	Data Type
S1	The number address	16 bits / 32 bits, BIN
S2	The number address	16 bits /32 bits, BIN

D	The result address	16 bits /32 bits, BIN

3.Suitable soft components

Word

Operands	System									Constant	Module	
	D	FD	ED	TD	CD	DX	DY	DM	DS	K/H	ID	QD
S1	●	●		●	●	●	●	●	●	●		
S2	●	●		●	●	●	●	●	●	●		
D	●			●	●		●	●	●			

Description

<16 bits operation >

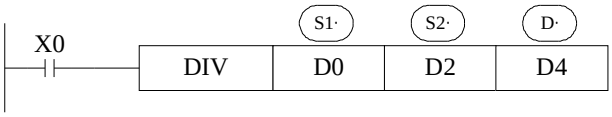

Dividend		Divisor		Result		Remainder
BIN		BIN		BIN		BIN
(D0)	÷	(D2)	→	D4)	---	(D5)
16 bits		16 bits		16 bits		16 bits

- (S1·) appoints the device's content be the dividend, (S2·) appoints the device's content be the divisor, (D·) appoints the device and the next one to store the result and the remainder.
- In the above example, if input X0 is ON, devision operation is executed every scan cycle.

<32 bits operation >

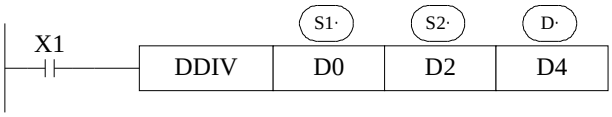

Dividend		Divisor	Result		Remainder
BIN		BIN	BIN		BIN
(D1,D0)	÷	(D3,D2)	(D5,D4)	---	(D7,D6)
32 bits		32 bits	32 bits		32 bits

- The dividend is composed by the device appointed by (S1·) and the next one. The divisor is composed by the device appointed by (S2·) and the next one. The result and the remainder are stored in the four sequential devices, the first one is appointed by (D·)
- If the value of the divisor is 0, then an operation error is executed and the operation of the DIV instruction is cancelled
- The highest bit of the result and remainder is the symbol bit (positive:0, negative: 1). When any of the dividend or the divisor is negative, then the result will be negative. When the dividend is negative, then the remainder will be negative.

4-6-5. Increment [INC] & Decrement [DEC]

1. Summary

Increase or decrease the number

Increment 1[INC]			
16 bits	INC	32 bits	DINC
Execution condition	Normally ON/OFF, rising/falling edge	Suitable Models	XC1.XC2.XC3.XC5.XCM
Hardware requirement	-	Software requirement	-
Increment 1[DEC]			
16 bits	DEC	32 bits	DDEC
Execution condition	Normally ON/OFF, rising/falling edge	Suitable Models	XC1.XC2.XC3.XC5.XCM
Hardware requirement	-	Software requirement	-

2. Operands

Operands	Function	Data Type
D	The number address	16 bits / 32bits,BIN

3. Suitable soft components

Word

Operands	System									Constant	Module	
	D	FD	ED	TD	CD	DX	DY	DM	DS	K/H	ID	QD
D	●			●	●		●	●	●			

Description

< Increment [INC]>

(D0) ＋1→(D0)

- On every execution of the instruction the device specified as the destination (D·) has its current value incremented (increased) by a value of 1.
- In 16 bits operation, when +32,767 is reached, the next increment will write -32,767 to the destination device. In this case, there's no additional flag to identify this change in the counted value.

<Decrement [DEC]>

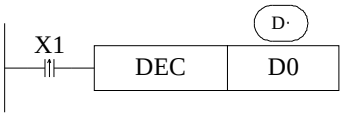

(D0) −1 → (D0)

- On every execution of the instruction the device specified as the destination (D·) has its current value decremented (decreased) by a value of 1.
- When -32，768 or -2，147，483，648 is reached, the next decrement will write +32，767 or +2，147，483，647 to the destination device.

4-6-6. Mean [MEAN]

1. Summary

Get the mean value of numbers

Mean [MEAN]			
16 bits	MEAN	32 bits	DMEAN
Execution condition	Normally ON/OFF, rising/falling edge	Suitable Models	XC1.XC2.XC3.XC5.XCM
Hardware requirement	-	Software requirement	-

2. Operands

Operands	Function	Data Type
S	The head address of the numbers	16 bits, BIN
D	The mean result address	16 bits, BIN
n	The number quantity	16 bits, BIN

3. Suitable soft components

Word

Operands	System									Constant	Module	
	D	FD	ED	TD	CD	DX	DY	DM	DS	K/H	ID	QD
S	●	●		●	●		●	●	●			
D	●			●	●		●	●	●			
n										●		

Description

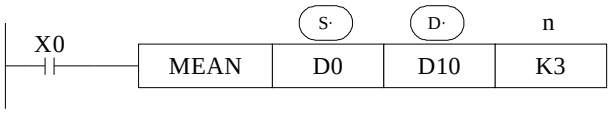

$$\frac{(D0) + (D1) + (D2)}{3} \longrightarrow (D10)$$

- The value of all the devices within the source range is summed and then divided by the number of devices summed, i.e. n.. This generates an integer mean value which is stored in the destination device (D) The remainder of the calculated mean is ignored.
- If the value of n is specified outside the stated range (1 to 64) an error is generated.

4-6-7. Logic AND [WAND] , Logic OR[WOR], Logic Exclusive OR [WXOR]

1. Summary

Do logic AND, OR, XOR for numbers

Logic AND [WAND]			
16 bits	WAND	32 bits	DWAND
Execution condition	Normally ON/OFF, rising/falling edge	Suitable Models	XC1.XC2.XC3.XC5.XCM
Hardware requirement	-	Software requirement	-
Logic OR[WOR]			
16 bits	WOR	32 bits	DWOR
Execution condition	Normally ON/OFF, rising/falling edge	Suitable Models	XC1.XC2.XC3.XC5.XCM
Hardware requirement	-	Software requirement	-
Logic Exclusive OR [WXOR]			
16 bits	WXOR	32 bits	DWXOR
Execution condition	Normally ON/OFF, rising/falling edge	Suitable Models	XC1.XC2.XC3.XC5.XCM
Hardware requirement	-	Software requirement	-

2. Operands

Operands	Function	Data Type
S1	The soft element address	16bit/32bit,BIN
S2	The soft element address	16bit/32bit,BIN
D	The result address	16bit/32bit,BIN

3. Suitable soft components

Word

Operands	System									Constant	Module	
	D	FD	ED	TD	CD	DX	DY	DM	DS	K/H	ID	QD
S1	●	●		●	●	●	●	●	●			
S2	●	●		●	●	●	●	●	●			
D	●			●	●		●	●	●			

Description

< Execute logic AND operation with each bit>

0&0=0 0&1=0
1&0=0 1&1=1

< Execute logic OR operation with each bit >

0 or 0=0 0 or 1=1
1 or 0=1 1 or 1=1

< Execute logic Exclusive OR operation with each bit >

0 xor 0=0 0 xor 1=1
1 xor 0=1 1 xor 1=0

If use this instruction along with CML instruction, XOR NOT operation could also be executed.

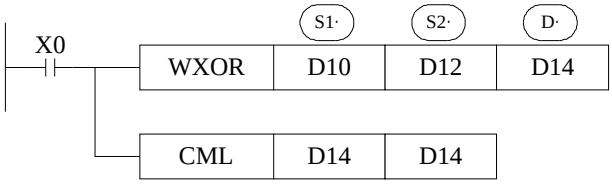

4-6-8. Converse [CML]

1. Summary

Converse the phase of the numbers

Converse [CML]			
16 bits	CML	32 bits	DCML
Execution condition	Normally ON/OFF, rising/falling edge	Suitable Models	XC1.XC2.XC3.XC5.XCM
Hardware requirement	-	Software requirement	-

2. Operands

Operands	Function	Data Type
S	Source number address	16 bits/32 bits, BIN
D	Result address	16 bits/32 bits, BIN

3. Suitable soft components

Word

Operands	System									Constant	Module	
	D	FD	ED	TD	CD	DX	DY	DM	DS	K/H	ID	QD
S1	●	●		●	●	●	●	●	●	●		
D	●			●	●		●	●	●			

Description

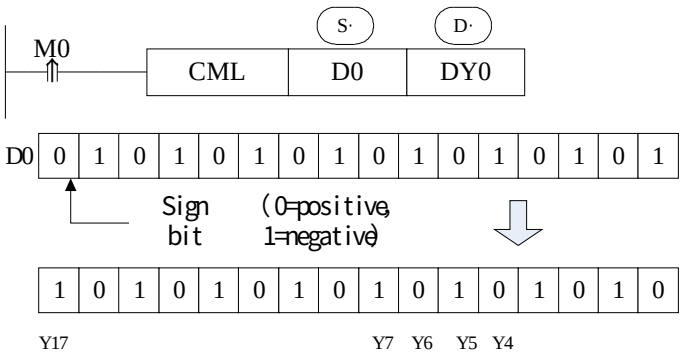

- Each data bit in the source device is inverted (1→0, 0→1) and sent to the destination device. If use constant K in the source device, it can be auto convert to be binary.
- It's available when you want to inverted output the PLC's output

< Reading of inverted input >

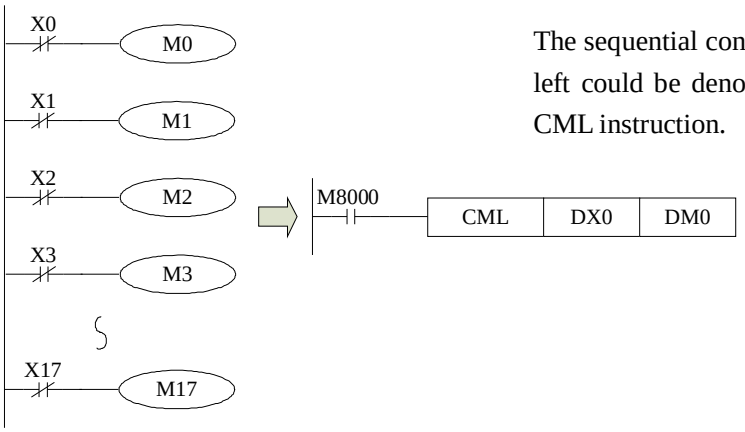

The sequential control instruction in the left could be denoted by the following CML instruction.

4-6-9. Negative [NEG]

1. Summary

Get the negative number

Negative [NEG]			
16 bits	NEG	32 bits	DNEG
Execution condition	Normally ON/OFF, rising/falling edge	Suitable Models	XC1.XC2.XC3.XC5.XCM
Hardware requirement	-	Software requirement	-

2. Operands

Operands	Function	Data Type
D	The source number address	16 bits/ bits, BIN

3. Suitable soft components

Word

Operands	System									Constant	Module	
	D	FD	ED	TD	CD	DX	DY	DM	DS	K/H	ID	QD
D	●			●	●		●	●	●			

Description

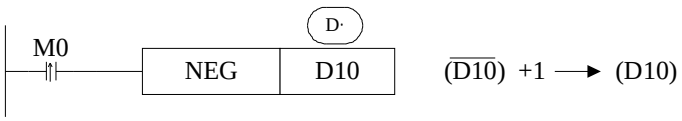

- The bit format of the selected device is inverted, I.e. any occurrence of a “1’ becomes a “0” and any occurrence of “0” becomes “1”, when this is complete, a further binary 1 is added to the bit format. The result is the total logic sigh change of the selected devices contents.

4-7. Shift Instructions

Mnemonic	Function	Chapter
SHL	Arithmetic shift left	4-7-1
SHR	Arithmetic shift right	4-7-1
LSL	Logic shift left	4-7-2
LSR	Logic shift right	4-7-2
ROL	Rotation left	4-7-3
ROR	Rotation right	4-7-3
SFTL	Bit shift left	4-7-4
SFTR	Bit shift right	4-7-5
WSFL	Word shift left	4-7-6
WSFR	Word shift right	4-7-7

4-7-1. Arithmetic shift left [SHL], Arithmetic shift right [SHR]

1. Summary

Do arithmetic shift left/right for the numbers

Arithmetic shift left [SHL]			
16 bits	SHL	32 bits	DSHL
Execution condition	Normally ON/OFF, rising/falling edge	Suitable Models	XC2.XC3.XC5.XCM
Hardware requirement	-	Software requirement	-
Arithmetic shift right [SHR]			
16 bits	SHR	32 bits	DSHR
Execution condition	Normally ON/OFF, rising/falling edge	Suitable Models	XC2.XC3.XC5.XCM
Hardware requirement	-	Software requirement	-

2. Operands

Operands	Function	Data Type
D	The source data address	16bit/32bit,BIN
n	Shift left or right times	16bit/32bit,BIN

3. Suitable soft components

Word

Operands	System									Constant	Module	
	D	FD	ED	TD	CD	DX	DY	DM	DS	K/H	ID	QD
D	●			●	●		●	●	●			
n										●		

Description

- After once execution, the low bit is filled in 0, the final bit is stored in carry flag.
- After once execution, the high bit is same with the bit before shifting, the final bit is stored in carry flag.

< Arithmetic shift left >

< Arithmetic shift right >

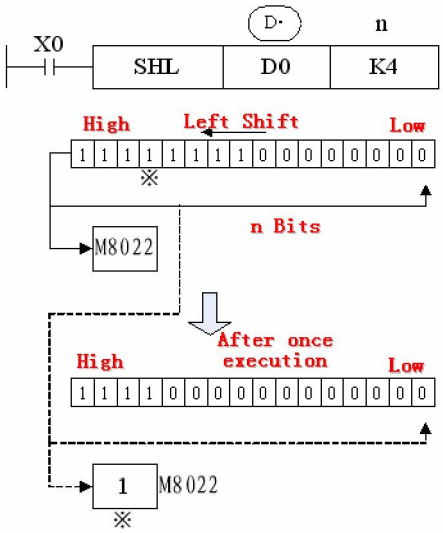

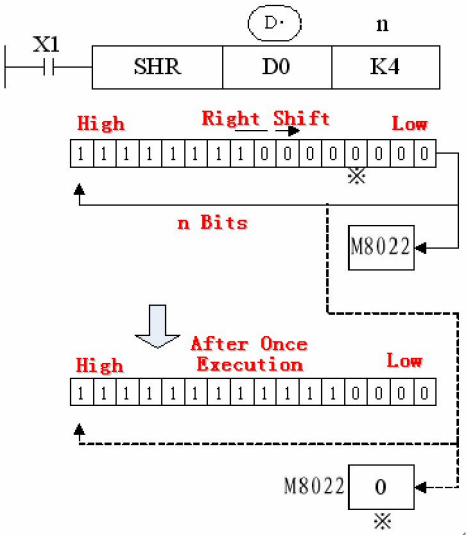

4-7-2. Logic shift left [LSL] , Logic shift right [LSR]

1. Summary

Do logic shift right/left for the numbers

Logic shift left [LSL]			
16 bits	LSL	32 bits	DLSL
Execution condition	Normally ON/OFF, rising/falling edge	Suitable Models	XC2.XC3.XC5.XCM
Hardware requirement	-	Software requirement	-
Logic shift right [LSR]			
16 bits	LSR	32 bits	DLSR
Execution condition	Normally ON/OFF, rising/falling edge	Suitable Models	XC2.XC3.XC5.XCM
Hardware requirement	-	Software requirement	-

2. Operands

Operands	Function	Data Type
D	Source data address	16 bits/32 bits, BIN
n	Arithmetic shift left/right times	16 bits/32bits, BIN

3. Suitable soft components

Word

Operands	System									Constant	Module	
	D	FD	ED	TD	CD	DX	DY	DM	DS	K/H	ID	QD
D	●			●	●		●	●	●			
n										●		

Description

- After once execution, the low bit is filled in 0, the final bit is stored in carry flag.
- LSL meaning and operation are the same as SHL.
- After once execution, the high bit is same with the bit before shifting, the final bit is stored in carry flag。

- LSR and SHR is different, LSR add 0 in high bit when moving, SHR all bits are moved.

< Logic shift left >

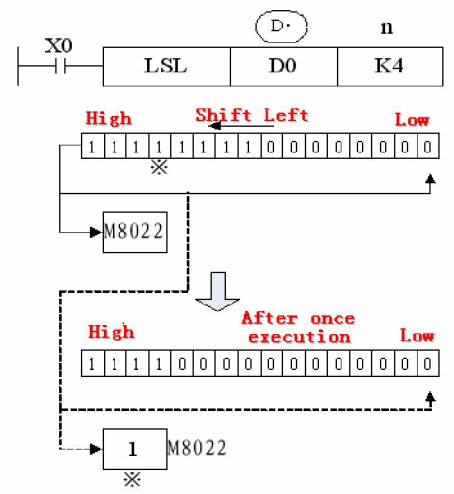

< Logic shift right >

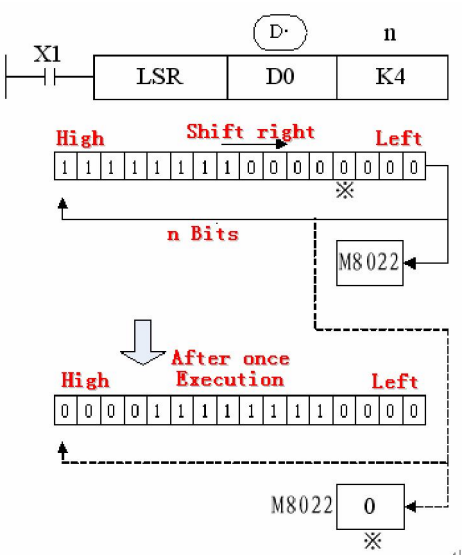

4-7-3. Rotation shift left **[ROL]** , Rotation shift right **[ROR]**

1. Summary

Continue and cycle shift left or right

Rotation shift left [ROL]			
16 bits	ROL	32 bits	DROL
Execution condition	Normally ON/OFF, rising/falling edge	Suitable Models	XC2.XC3.XC5.XCM
Hardware requirement	-	Software requirement	-
Rotation shift right [ROR]			
16 bits	ROR	32 bits	DROR
Execution condition	Normally ON/OFF, rising/falling edge	Suitable Models	XC2.XC3.XC5.XCM
Hardware requirement	-	Software requirement	-

2. Operands

Operands	Function	Data Type

D	Source data address	16 bits/32 bits, BIN
n	Shift right or left times	16 bits/32 bits, BIN

3. Suitable soft components

Word	Operands	System									Constant	Module	
		D	FD	ED	TD	CD	DX	DY	DM	DS	K/H	ID	QD
	D	●			●	●		●	●	●			
	n										●		

Description

l The bit format of the destination device is rotated n bit places to the left on every operation of the instruction.

< Rotation shift left >

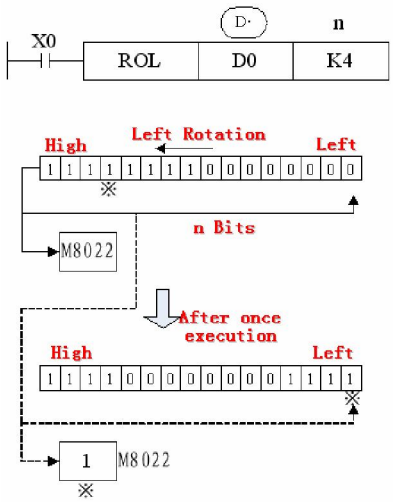

< Rotation shift right >

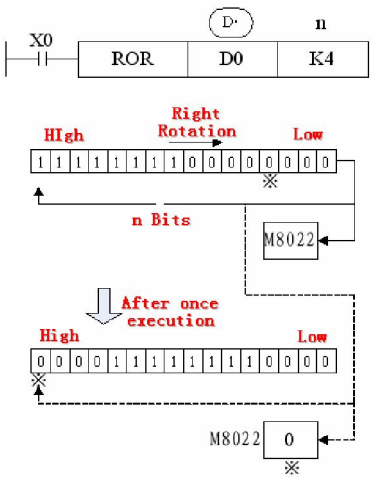

4-7-4. Bit shift left [SFTL]

1. Summary

Bit shift left

Bit shift left [SFTL]			
16 bits	SFTL	32 bits	DSFTL
Execution condition	Normally ON/OFF, rising/falling edge	Suitable Models	XC2.XC3.XC5.XCM
Hardware requirement	-	Software requirement	-

2. Operands

Operands	Function	Types
S	Source soft element head address	bit
D	Target soft element head address	bit

n1	Source data quantity	16 bits /32 bits, BIN
n2	Shift left times	16 bits/32 bits, BIN

3. Suitable soft components

Word

Operands	System									Constant	Module	
	D	FD	ED	TD	CD	DX	DY	DM	DS	K/H	ID	QD
n1	●			●	●	●	●	●	●	●		
n2	●			●	●	●	●	●	●	●		

Bit

Operands	System						
	X	Y	M	S	T	C	Dn.m
S	●	●	●	●	●	●	
D		●	●	●	●	●	

Description

- The instruction copies n2 source devices to a bit stack of length n1. For every new addition of n2 bits, the existing data within the bit stack is shifted n2 bits to the left/right. Any bit data moving to the position exceeding the n1 limit is diverted to an overflow area.
- In every scan cycle, loop shift left action will be executed

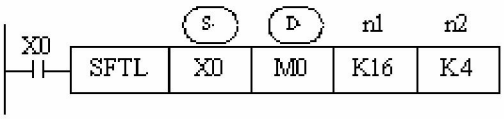

① M15~M12→Overflow
② M11~M 8→M15~M 12
③ M 7~M 4→M11~M8
④ M 3~M 0→M7~M4
⑤ X 3~X 0→M3~M0

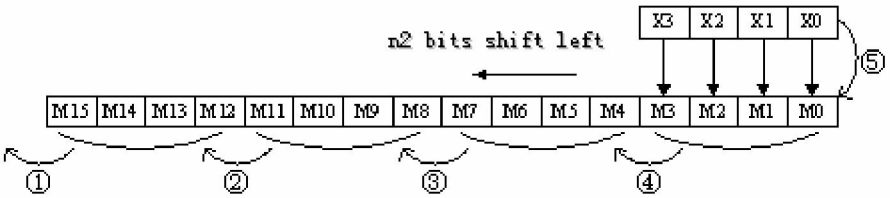

4-7-5. Bit shift right [SFTR]

1. Summary

Bit shift right

Bit shift right [SFTR]			
16 bits	SFTR	32 bits	DSFTR
Execution	rising/falling edge	Suitable	XC2.XC3.XC5.XCM

condition		Models	
Hardware requirement	-	Software requirement	-

2. Operands

Operands	Function	Data Type
S	Source soft element head address	bit
D	Target soft element head address	bit
n1	Source data quantity	16 bits/32 bits, BIN
n2	Shift right times	16 bits/32 bits, BIN

3. Suitable soft components

Word

Operands	System									Constant	Module	
	D	FD	ED	TD	CD	DX	DY	DM	DS	K/H	ID	QD
n1	●			●	●	●	●	●	●	●		
n2	●			●	●	●	●	●	●	●		

Bit

Operands	System						
	X	Y	M	S	T	C	Dn.m
S	●	●	●	●	●	●	
D		●	●	●	●	●	

Description

- The instruction copies n2 source devices to a bit stack of length n1. For every new addition of n2 bits, the existing data within the bit stack is shifted n2 bits to the left/right. Any bit data moving to the position exceeding the n1 limit is diverted to an overflow area.
- In every scan cycle, loop shift right action will be executed

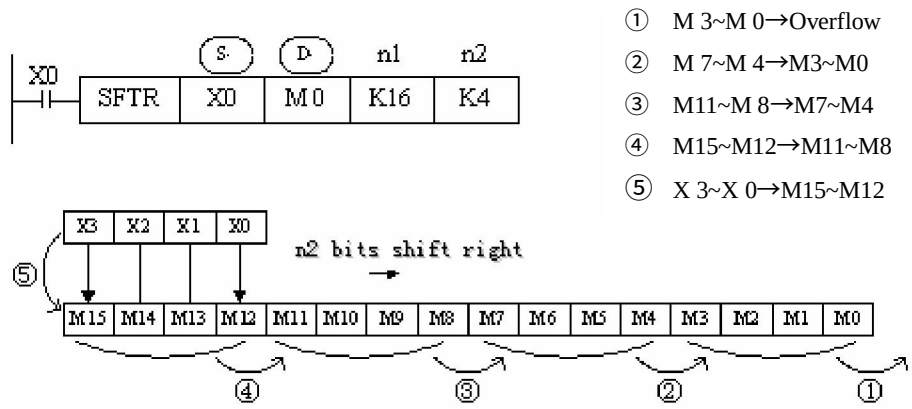

4-7-6. Word shift left [WSFL]

1. Summary

Word shift left

Word shift left [[WSFL]			
16 bits	WSFL	32 bits	-
Execution condition	rising/falling edge	Suitable Models	XC2.XC3.XC5.XCM
Hardware requirement	-	Software requirement	-

2. Operands

Operands	Function	Data Type
S	Source soft element head address	16 bits/32 bits, BIN
D	Target soft element head address	16 bits /32 bits, BIN
n1	Source data quantity	16 bits /32 bits, BIN
n2	Word shift left times	16 bits /32 bits, BIN

3. Suitable soft components

Word

Operands	System									Constant	Module	
	D	FD	ED	TD	CD	DX	DY	DM	DS	K/H	ID	QD
S	●	●		●	●	●	●	●	●			
D	●			●	●		●	●	●			
n1	●			●	●		●	●	●	●		
n2	●			●	●		●	●	●	●		

Description

- The instruction copies n2 source devices to a word stack of length n1. For each addition of n2 words, the existing data within the word stack is shifted n2 words to the left. Any word data moving to a position exceeding the n1 limit is diverted to an overflow area.
- In every scan cycle, loop shift left action will be executed.

① D25~D22→Overflow
② D21~D18→D25~D22
③ D17~D14→D21~D18
④ D13~D10→D17~D14
⑤ D 3~D 0→D13~D10

n2 word shift left

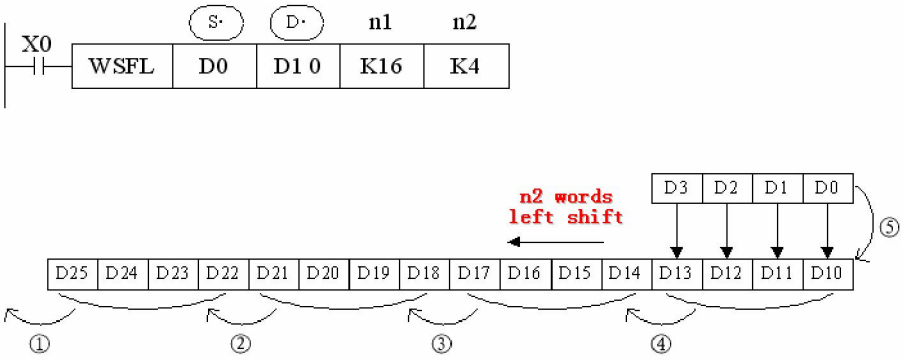

4-7-7. Word shift right[WSFR]

1. Summary

Word shift right

Word shift right [WSFR]			
16 bits	WSFR	32 bits	-
Execution condition	rising/falling edge	Suitable Models	XC2.XC3.XC5.XCM
Hardware requirement	-	Software requirement	-

2. Operands

Operands	Function	Data Type
S	Source soft element head address	16 bits/32 bits, BIN
D	Target soft element head address	16 bits/32 bits, BIN
n1	Source data quantity	16 bits/32 bits, BIN
n2	Shift right times	16 bits/32 bits, BIN

3. Suitable soft components

Word

Operands	System									Constant	Module	
	D	FD	ED	TD	CD	DX	DY	DM	DS	K/H	ID	QD
S	●	●		●	●	●	●	●	●			
D	●			●	●		●	●	●			
n1	●			●	●		●	●	●	●		
n2	●			●	●		●	●	●	●		

Description

- The instruction copies n2 source devices to a word stack of length n1. For each addition of n2 words, the existing data within the word stack is shifted n2 words to the right. Any word data moving to a position exceeding the n1 limit is diverted to an overflow area.

- In every scan cycle, loop shift right action will be executed

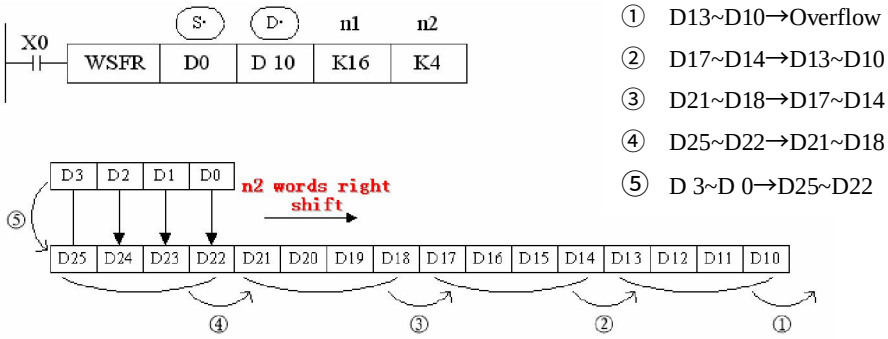

4-8. Data Convert

Mnemonic	Function	Chapter
WTD	Single word integer converts to double word integer	4-8-1
FLT	16 bits integer converts to float point	4-8-2
DFLT	32 bits integer converts to float point	4-8-2
FLTD	64 bits integer converts to float point	4-8-2
INT	Float point converts to integer	4-8-3
BIN	BCD convert to binary	4-8-4
BCD	Binary converts to BCD	4-8-5
ASCI	Hex. converts to ASCII	4-8-6
HEX	ASCII converts to Hex.	4-8-7
DECO	Coding	4-8-8
ENCO	High bit coding	4-8-9
ENCOL	Low bit coding	4-8-10

4-8-1. Single word integer converts to double word integer [WTD]

1. Summary

Single word integer converts to double word integer [WTD]			
16 bits	WTD	32 bits	-
Execution condition	Normally ON/OFF, rising/falling edge	Suitable Models	XC2.XC3.XC5.XCM
Hardware requirement	-	Software requirement	-

2. Operands

Operands	Function	Data Type
S	Source soft element address	16 bits, BIN
D	Target soft element address	32 bits, BIN

3.Suitable soft components

Word

Operands	System									Constant	Module	
	D	FD	ED	TD	CD	DX	DY	DM	DS	K/H	ID	QD
S	●	●		●	●	●	●	●	●			
D	●			●	●		●	●	●			

Description

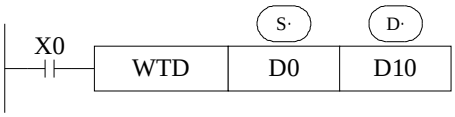

(D0) → (D11，D10)
Single Word Double

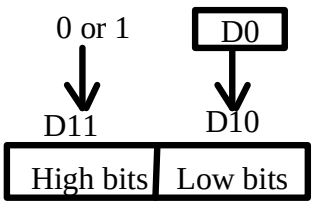

- When single word D0 is positive integer, after executing this instruction, the high bit of double word D10 is 0.
- When single word D0 is negative integer, after executing this instruction, the high bit of double word D10 is 1.

4-8-2. 16 bits integer converts to float point [FLT]

1. Summary

16 bits integer converts to float point [FLT]					
16 bits	FLT	32 bits	DFLT	64 bits	FLTD
Execution condition	Normally ON/OFF, rising/falling edge		Suitable Models	XC2.XC3.XC5.XCM	
Hardware requirement	-		Software requirement	-	

2. Operands

Operands	Function	Data Type
S	Source soft element address	16 bits/32 bits/64 bits,BIN
D	Target soft element address	32 bits/64 bits,BIN

3. Suitable soft components

Word

Operands	System									Constant	Module	
	D	FD	ED	TD	CD	DX	DY	DM	DS	K/H	ID	QD
S	●	●								●		
D	●											

Description

<16 bits>

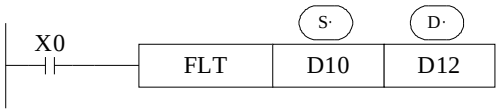

(D10) → (D13,D12)
BIN integer Binary float point

<32 bits >

(D11,D10) → (D13,D12)
BIN integer Binary float point

<64 bits>

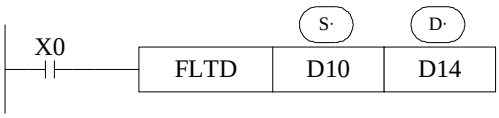

(D13,D12,D11,D10) → (D17,D16,D15,D14)
BIN integer Binary float point

- Convert BIN integer to binary float point. As the constant K ,H will auto convert by the float operation instruction, so this FLT instruction can't be used.
- The instruction is contrary to INT instruction

4-8-3. Float point converts to integer [INT]

1. Summary

Float point converts to integer [INT]			
16 bits	INT	32 bits	DINT
Execution condition	Normally ON/OFF, rising/falling edge	Suitable Models	XC2.XC3.XC5.XCM
Hardware requirement	-	Software requirement	-

2. Operands

Operands	Function	Data Type
S	Source soft element address	16 bits/32 bits, BIN
D	Target soft element address	16 bits/32 bits, BIN

3. Suitable soft components

Word

Operands	System									Constant	Module	
	D	FD	ED	TD	CD	DX	DY	DM	DS	K/H	ID	QD
S	●	●										
D	●											

Description

<16 bits>

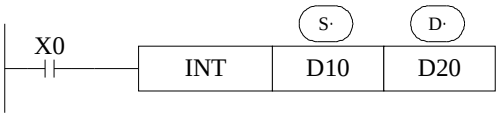

(D11,D10) → (D20)
Binary Float BIN integer
Give up the data after the decimal dot

<32 bits>

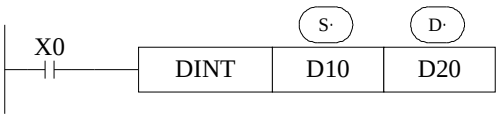

(D11,D10) → (D20,D21)
Binary Float BIN integer
Give up the data after the decimal dot

- The binary source number is converted into a BIN integer and stored at the destination device. Abandon the value behind the decimal point.
- This instruction is contrary to FLT instruction.
- When the result is 0, the flag bit is ON
  When converting, less than 1 and abandon it, zero flag is ON.
  The result is over below data, the carry flag is ON.
  16 bits operation: -32,768~32,767
  32 bits operation: -2,147,483,648~2,147,483,647

4-8-4. BCD convert to binary [BIN]

1. Summary

BCD convert to binary [BIN]			
16 bits	BIN	32 bits	-
Execution condition	Normally ON/OFF, rising/falling edge	Suitable Models	XC2.XC3.XC5.XCM
Hardware requirement	-	Software requirement	-

2. Operands

Operands	Function	Data Type
S	Source soft element address	BCD
D	Target soft element address	16 bits/32 bits, BIN

3. Suitable soft components

Word

Operands	System									Constant	Module	
	D	FD	ED	TD	CD	DX	DY	DM	DS	K/H	ID	QD
S	●	●		●	●	●	●	●	●			
D	●			●	●		●	●	●			

Description

Convert and move instruction of Source (BCD) → destination (BIN)

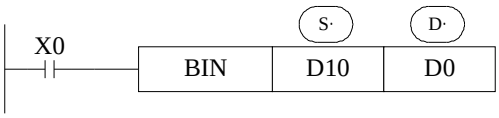

- When source data is not BCD code, M8067（Operation error）, M8004 (error occurs)
- As constant K automatically converts to binary, so it’s not suitable for this instruction.

4-8-5. Binary convert to BCD [BCD]

1. Summary

Binary convert to BCD [BCD]			
16 bits	BCD	32 bits	-
Execution condition	Normally ON/OFF, rising/falling edge	Suitable Models	XC2.XC3.XC5.XCM
Hardware requirement	-	Software requirement	-

2. Operands

Operands	Function	Data Type
S	Source soft element address	16 bits/32 bits, BIN
D	Target soft element address	BCD code

3. Suitable soft components

Word

Operands	System									Constant	Module	
	D	FD	ED	TD	CD	DX	DY	DM	DS	K/H	ID	QD
S	●	●		●	●	●	●	●	●			
D	●			●	●		●	●	●			

Description

Convert and move instruction of source (BIN)→destination (BCD)

- This instruction can be used to output data directly to a seven-segment display.

4-8-6. Hex. converts to ASCII [ASCI]

1. Summary

Hex. convert to ASCII [ASCI]			
16 bits	ASCI	32 bits	-
Execution condition	Normally ON/OFF, rising/falling edge	Suitable Models	XC2.XC3.XC5.XCM
Hardware requirement	-	Software requirement	-

2. Operands

Operands	Function	Data Type
S	Source soft element address	2 bits, HEX
D	Target soft element address	ASCII code
n	Transform character quantity	16 bits, BIN

3. Suitable soft components

Word

Operands	System									Constant	Module	
	D	FD	ED	TD	CD	DX	DY	DM	DS	K/H	ID	QD
S	●	●		●	●	●	●	●	●			
D	●			●	●		●	●	●			
n	●			●	●		●	●	●	●		

Description

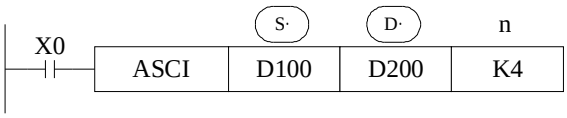

Convert each bit of source's (S) Hex. format data to be ASCII code, move separately to the high 8 bits and low 8 bits of destination (D). The convert alphanumeric number is assigned with n.

(D·) is low 8 bits, high 8 bits, store ASCII data.

The convert result is this

n D	K1	K2	K3	K4	K5	K6	K7	K8	K9
D200 down	[C]	[B]	[A]	[0]	[4]	[3]	[2]	[1]	[8]
D200 up		[C]	[B]	[A]	[0]	[4]	[3]	[2]	[1]
D201 down			[C]	[B]	[A]	[0]	[4]	[3]	[2]
D201 up				[C]	[B]	[A]	[0]	[4]	[3]
D202 down					[C]	[B]	[A]	[0]	[4]
D202 up						[C]	[B]	[A]	[0]
D203 down							[C]	[B]	[A]

Assign start device：
(D100)=0ABCH
(D101)=1234H
(D102)=5678H

D203 up		[C]	[B]
D204 down			[C]

[0]=30H [1]=31H
[5]=35H [A]=41H
[2]=32H [6]=36H
[B]=42H [3]=33H
[7]=37H [C]=43H
[4]=34H [8]=38H

4-8-7. ASCII convert to Hex.[HEX]

1. Summary

ASCII converts to Hex. [HEX]			
16 bits	HEX	32 bits	-
Execution condition	Normally ON/OFF, rising/falling edge	Suitable Models	XC2.XC3.XC5.XCM
Hardware requirement	-	Software requirement	-

2. Operands

Operands	Function	Date type
S	Source soft element address	ASCII
D	Target soft element address	2 bits, HEX
n	Character quantity	16 bits, BIN

3. Suitable soft components

Word

Operands	System									Constant	Module	
	D	FD	ED	TD	CD	DX	DY	DM	DS	K/H	ID	QD
S	●	●		●	●	●	●	●	●			
D	●			●	●		●	●	●			
n										●		

Description

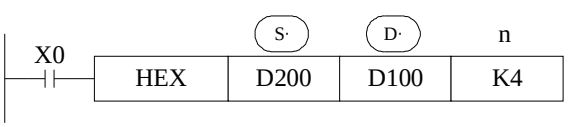

Convert the high and low 8 bits in source (S·) to HEX data. Move 4 bits every time to destination (D·) . The convert alphanumeric number is assigned by n.

The convert of the upward program is the following：

(S・)	ASCII Code	HEX Convert
D200 down	30H	0
D200 up	41H	A
D201 down	42H	B
D201 up	43H	C
D202 down	31H	1
D202 up	32H	2
D203 down	33H	3
D203 up	34H	4
D204 down	35H	5

n (D・)	D102	D101	D100
1	Not change to be 0		··· 0H
2			·· 0AH
3			· 0ABH
4			0ABCH
5		··· 0H	ABC1H
6		·· 0AH	BC12H
7		· 0ABH	C123H
8		0ABCH	1234H
9	··· 0H	ABC1H	2345H

n=k4

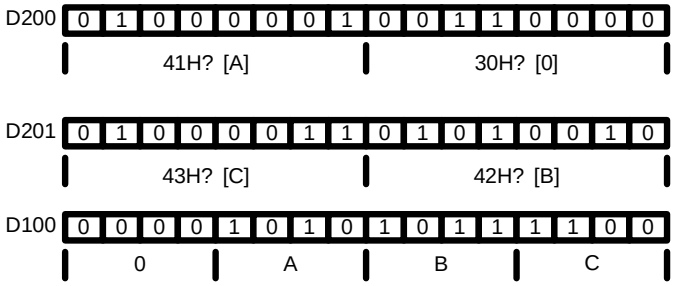

4-8-8. Coding [DECO]

1. Summary

Transform the ASCII code to Hex numbers.

Coding [DECO]			
16 bits	DECO	s	-
Execution condition	Normally ON/OFF, rising/falling edge	Suitable Models	XC2.XC3.XC5.XCM
Hardware requirement	-	Software requirement	-

2. Operands

Operands	Function	Data Type
S	Source soft element address	ASCII
D	Target soft element address	2 bits HEX
n	The coding soft element quantity	16bits, BIN

2. Suitable soft components

Word

Operands	System									Constant	Module	
	D	FD	ED	TD	CD	DX	DY	DM	DS	K/H	ID	QD
S	●	●		●	●	●	●	●	●			
n										●		

Bit

Operands	System						
	X	Y	M	S	T	C	Dn.m
D	●	●	●	●	●	●	

Description

< When (D·) is bit unit > n≤16

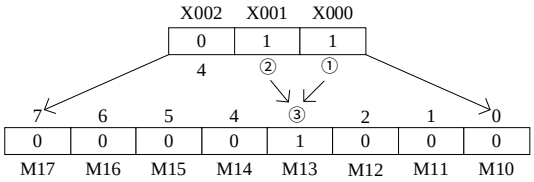

- The source address is 1+2=3，so starts from M10, the number 3 bit (M13) is 1. If the source are all 0, M10 is 1.
- When n=0, no operation, beyond n=0~16, don't execute the instruction.
- When n=16, if coding command (D·) is soft unit, it's point is 2^16=65536。
- When drive input is OFF, instructions are not executed, the activate coding output keep on activate.

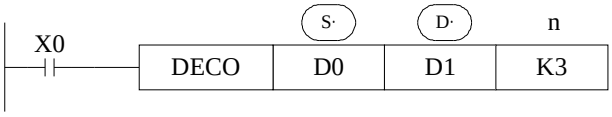

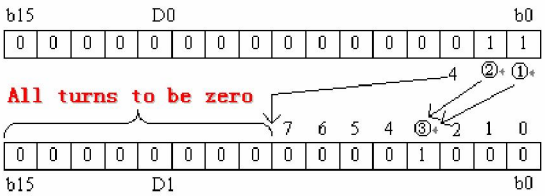

- Low n bits(n≤4) of source address is decoded to target address. n≤3, the high bit of target address all become 0.
- When n=0, no operation, beyond n=0~14, don't execute the instruction.

4-8-9. High bit coding [ENCO]

1. Summary

Transform the ASCII code to hex numbers

High bit coding [ENCO]			
16 bits	ENCO	32 bits	-
Execution condition	Normally ON/OFF, rising/falling edge	Suitable Models	XC2.XC3.XC5.XCM
Hardware requirement	-	Software requirement	-

2. Operands

Operands	Function	Data Type
S	data address need coding	16 bits, BIN; bit
D	Coding result address	16 bits, BIN
n	soft element quantity to save result	16 bits, BIN

3. Suitable soft components

Word

Operands	System									Constant	Module	
	D	FD	ED	TD	CD	DX	DY	DM	DS	K/H	ID	QD
S	●	●		●	●	●	●	●	●			
D	●			●	●		●	●	●			
n										●		

Bit

Operands	System						
	X	Y	M	S	T	C	Dn.m
S	●	●	●	●	●	●	

Description

< When (S·) is bit device > n≤16

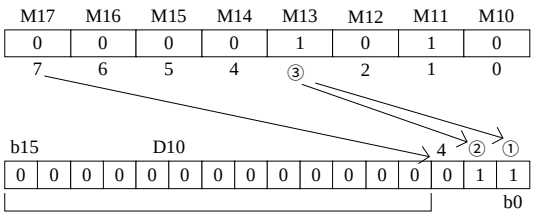

All be 0

< When (S·) is word device > n≤4

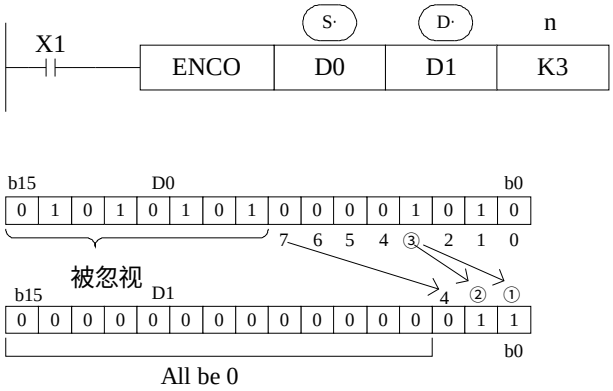

- If many bits in the source ID are 1, ignore the low bits. If source ID are all 0, don't execute the instructions.
- When drive input is OFF, the instruction is not executed, encode output don't change.
- When n=8, if encode instruction's "S" is bit unit, it's point number is 2^8=256

4-8-10. Low bit coding [ENCOL]

1. Summary

Transform the ASCII to hex numbers.

Low bit coding [ENCOL]			
16 bits	ENCOL	32 bits	-
Execution condition	Normally ON/OFF, rising/falling edge	Suitable Models	XC2.XC3.XC5.XCM
Hardware requirement	-	Software requirement	-

2. Operands

Operands	Function	Data Type
S	Soft element address need coding	16bit,BIN；bit
D	Soft element address to save coding result	16bit,BIN
n	The soft element quantity to save result	16bit,BIN

3. Suitable soft components

Word

Operands	System									Constant	Module	
	D	FD	ED	TD	CD	DX	DY	DM	DS	K/H	ID	QD
S	●	●		●	●	●	●	●	●			
D	●			●	●		●	●	●			
n										●		

Bit

Operands	System						
	X	Y	M	S	T	C	Dn.m
S	●	●	●	●	●	●	

Description

<if (S·) is bit device > n≤16

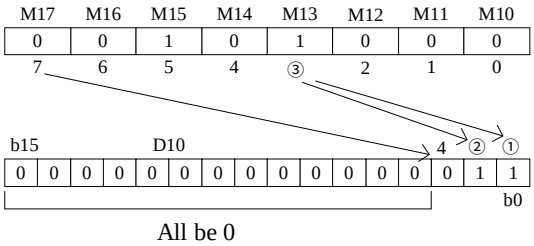

< if (S·) is word device> n≤4

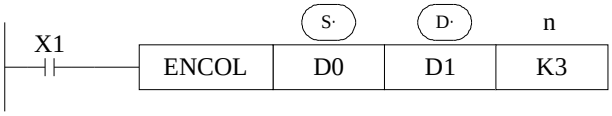

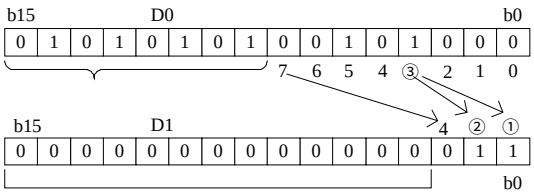

- If many bits in the source ID are 1, ignore the high bits. If source ID are all 0, don't execute the instructions。
- When drive input is OFF, the instruction is not executed, encode output don't change
- When n=8, if encode instruction's (S·) is bit unit, it's point number is 2^8=256

4-9. Floating Operation

Mnemonic	Function	Chapter
ECMP	Float Compare	4-9-1
EZCP	Float Zone Compare	4-9-2
EADD	Float Add	4-9-3
ESUB	Float Subtract	4-9-4
EMUL	Float Multiplication	4-9-5
EDIV	Float Division	4-9-6
ESQR	Float Square Root	4-9-7
SIN	Sine	4-9-8
COS	Cosine	4-9-9
TAN	Tangent	4-9-10
ASIN	ASIN	4-9-11
ACOS	ACOS	4-9-12
ATAN	ATAN	4-9-13

4-9-1. Float Compare [ECMP]

1. Summary

Float Compare [ECMP]			
16 bits	-	32 bits	ECMP
Execution condition	Normally ON/OFF, rising/falling edge	Suitable Models	XC2.XC3.XC5.XCM
Hardware requirement	-	Software requirement	-

2. Operands

Operands	Function	Data Type
S1	Soft element address need compare	32 bits, BIN
S2	Soft element address need compare	32 bits, BIN
D	Compare result	bit

3. Suitable soft components

Word

Operands	System									Constant	Module	
	D	FD	ED	TD	CD	DX	DY	DM	DS	K/H	ID	QD
S1	●	●				●	●	●	●	●		
S2	●	●				●	●	●	●	●		

Bit

Operands	System						
	X	Y	M	S	T	C	Dn.m
D		●	●	●			

Description

(D11,D10) : (D21,D20) → M0,M1,M2
Binary Floating Binary Floating

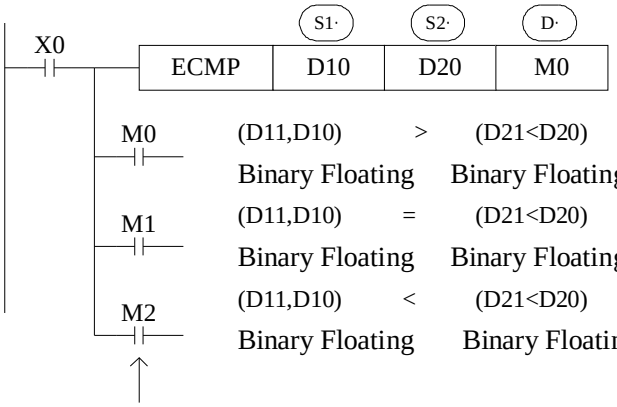

(D11,D10) > (D21<D20)
Binary Floating Binary Floating
(D11,D10) = (D21<D20)
Binary Floating Binary Floating
(D11,D10) < (D21<D20)
Binary Floating Binary Floating

The status of the destination device will be kept even if the ECMP instruction is deactivated.

- The binary float data of S1 is compared to S2. The result is indicated by 3 bit devices specified with the head address entered as D
- If a constant K or H used as source data, the value is converted to floating point before the addition operation.

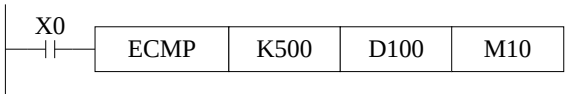

（K500）：　　（D101，D100）→M10,M11,M12
Binary converts to floating　　Binary floating

4-9-2. Float Zone Compare [EZCP]

1. Summary

Float Zone Compare [EZCP]			
16 bits	-	32 bits	EZCP
Execution condition	Normally ON/OFF, rising/falling edge	Suitable Models	XC2.XC3.XC5.XCM
Hardware requirement	-	Software requirement	-

2. Operands

Operands	Function	Data Type
S1	Soft element address need compare	32 bits, BIN
S2	Upper limit of compare data	32 bits, BIN
S3	Lower limit of compare data	32 bits, BIN
D	The compare result soft element address	bit

3.Suitable soft components

Word

Operands	System									Constant	Module	
	D	FD	ED	TD	CD	DX	DY	DM	DS	K/H	ID	QD
S1	●	●				●	●	●	●	●		
S2	●	●				●	●	●	●	●		
S3	●	●				●	●	●	●	●		

Bit

Operands	System						
	X	Y	M	S	T	C	Dn.m
D		●	●	●			

Description

Compare a float range with a float value..

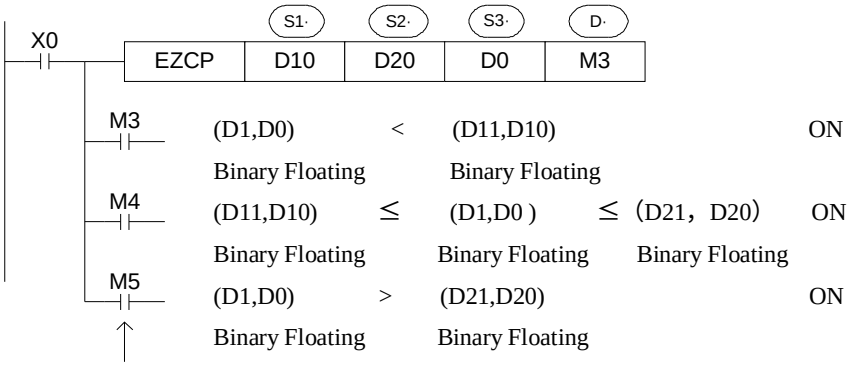

The status of the destination device will be kept even if the EZCP instruction is deactivated.

- The data of S1 is compared to the data of S2. The result is indicated by 3 bit devices specified with the head address entered as D.
- If a constant K or H used as source data, the value is converted to floating point before the addition operation.

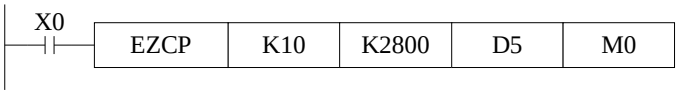

（K10）：　[D6,D5]：　（K2800）→　M0，M1，M2

Binary converts to Floating　Binary Floating　Binary converts to Floating

Please set S1<S2, when S2>S1, see S2 as the same with S1 and compare them

4-9-3. Float Add[EADD]

1. Summary

Float Add [EADD]			
16 bits	-	32 bits	EADD
Execution condition	Normally ON/OFF, rising/falling edge	Suitable Models	XC2.XC3.XC5.XCM
Hardware requirement	-	Software requirement	-

2. Operands

Operands	Function	Data Type
S1	Soft element address need to add	32 bits, BIN
S2	Soft element address need to add	32 bits, BIN
D	Result address	32 bits, BIN

3. Suitable soft components

Word

Operands	System									Constant	Module	
	D	FD	ED	TD	CD	DX	DY	DM	DS	K/H	ID	QD
S1	●	●				●	●	●	●	●		
S2	●	●				●	●	●	●	●		
D	●						●	●	●			

Description

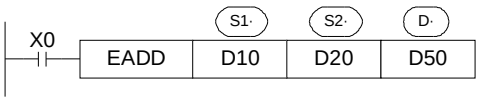

(D11,D10) + (D21,D20) → (D51,D50)

Binary Floating Binary Floating Binary Floating

- The floating point values stored in the source devices S1 and S2 are algebraically added and the result stored in the destination device D.
- If a constant K or H used as source data, the value is converted to floating point before the addition operation.

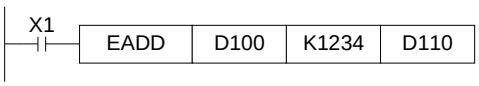

(K1234) + (D101,D100) → (D111,D110)

Binary converts to Floating Binary Floating Binary Floating

- The same device may be used as a source and as the destination. If this is the case then, on continuous operation of the EADD instruction, the result of the previous operation will be used as a new source value and a new result calculated. This will happen every program scan unless the pulse modifier or an interlock program is used.

4-9-4. Float Sub[ESUB]

1. Summary

Float Sub [ESUB]			
16 bits	-	32 bits	ESUB
Execution condition	Normally ON/OFF, rising/falling edge	Suitable Models	XC2.XC3.XC5.XCM
Hardware requirement	-	Software requirement	-

2. Operands

Operands	Function	Data Type
S1	Soft element address need to subtract	32 bits, BIN
S2	Soft element address need to subtract	32 bits, BIN
D	Result address	32 bits, BIN

3. Suitable soft components

Word

Operands	System									Constant	Module	
	D	FD	ED	TD	CD	DX	DY	DM	DS	K/H	ID	QD
S1	●	●				●	●	●	●	●		
S2	●	●				●	●	●	●	●		
D	●						●	●	●			

Description

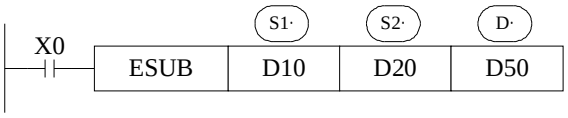

(D11,D10) − (D21,D20) → (D51,D50)

Binary Floating Binary Floating Binary Floating

- The floating point value of S2 is subtracted from the floating point value of S1 and the result stored in destination device D.
- If a constant K or H used as source data, the value is converted to floating point before the addition operation。

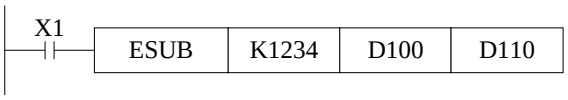

(K1234) − (D101,D100) → (D111,D110)

Binary converts to Floating Binary Floating Binary Floating

- The same device may be used as a source and as the destination. If this is the case then, on continuous operation of the EADD instruction, the result of the previous operation will be used as a new source value and a new result calculated. This will happen every program scan unless the pulse modifier or an interlock program is used.

4-9-5. Float Mul[EMUL]

1. Summary

Float Multiply [EMUL]			
16 bits	-	32 bits	EMUL
Execution condition	Normally ON/OFF, rising/falling edge	Suitable Models	XC2.XC3.XC5.XCM
Hardware requirement	-	Software requirement	-

2. Operands

Operands	Function	Data Type
S1	Soft element address need to multiply	32 bits, BIN
S2	Soft element address need to multiply	32 bits, BIN
D	Result address	32 bits, BIN

3. Suitable soft components

Word

Operands	System									Constant	Module	
	D	FD	ED	TD	CD	DX	DY	DM	DS	K/H	ID	QD
S1	●	●				●	●	●	●	●		
S2	●	●				●	●	●	●	●		
D	●						●	●	●			

Description

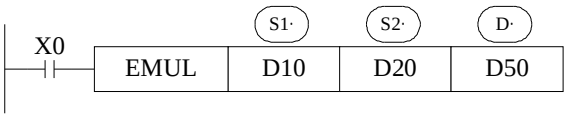

(D11，D10) × (D21,D20) → (D51,D50)

Binary Floating Binary Floating Binary Floating

- The floating value of S1 is multiplied with the floating value point value of S2. The result of the multiplication is stored at D as a floating value
- If a constant K or H used as source data, the value is converted to floating point before the addition operation.

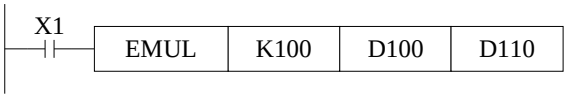

(K100) × (D101,D100) → (D111,D110)

Binary converts to Floating Binary Floating Binary Floating

4-9-6. Float Div[EDIV]

1. Summary

Float Divide [EDIV]			
16 bits	-	32 bits	EDIV
Execution condition	Normally ON/OFF, rising/falling edge	Suitable Models	XC2.XC3.XC5.XCM
Hardware requirement	-	Software requirement	-

2. Operands

Operands	Function	Data Type
S1	Soft element address need to divide	32 bits, BIN
S2	Soft element address need to divide	32 bits, BIN
D	Result address	32 bits, BIN

3. Suitable soft components

word

Operands	System									Constant	Module	
	D	FD	ED	TD	CD	DX	DY	DM	DS	K/H	ID	QD
S1	●	●				●	●	●	●	●		
S2	●	●				●	●	●	●	●		
D	●						●	●	●			

Description

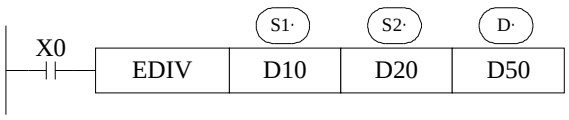

(D11,D10) ÷ (D21,D20) → (D51,D50)

Binary Floating Binary Floating Binary Floating

- The floating point value of S1 is divided by the floating point value of S2. The result of the division is stored in D as a floating point value. No remainder is calculated.
- If a constant K or H used as source data, the value is converted to floating point before the addition operation

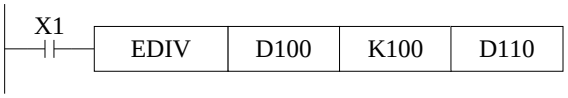

(D101,D100) ÷ (K100) → (D111,D110)

Binary converts to Floating Binary Floating Binary Floating

If S2 is 0, the calculate is error, the instruction can not work

4-9-7. Float Square Root [ESQR]

1. Summary

Float Square Root [ESQR]			
16 bits	-	32 bits	ESQR
Execution condition	Normally ON/OFF, rising/falling edge	Suitable Models	XC2.XC3.XC5.XCM
Hardware requirement	-	Software requirement	-

2. Operands

Operands	Function	Data Type
S	The soft element address need to do square root	32 bits, BIN
D	The result address	32 bits, BIN

3. Suitable soft components

Word

Operands	System									Constant	Module	
	D	FD	ED	TD	CD	DX	DY	DM	DS	K/H	ID	QD
S	●	●				●	●	●	●	●		
D	●						●	●	●			

Description

(D11,D10) → (D21,D20)
Binary Floating Binary Floating

- A square root is performed on the floating point value in S the result is stored in D
- If a constant K or H used as source data, the value is converted to floating point before the addition operation.

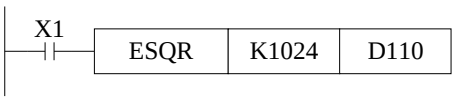

(K1024) → (D111，D110)
Binary converts to Floating Binary Floating

- When the result is zero, zero flag activates.
- Only when the source data is positive will the operation be effective. If S is negative then an error occurs and error flag M8067 is set ON, the instruction can't be executed.

4-9-8. Sine[SIN]

1. Summary

Float Sine[SIN]			
16 bits	-	32 bits	SIN
Execution condition	Normally ON/OFF, rising/falling edge	Suitable Models	XC2.XC3.XC5.XCM
Hardware requirement	-	Software requirement	-

2. Operands

Operands	Function	Data Type
S	The soft element address need to do sine	32 bits, BIN
D	The result address	32 bits, BIN

3. Suitable soft components

Word

Operands	System									Constant	Module	
	D	FD	ED	TD	CD	DX	DY	DM	DS	K/H	ID	QD
S	●	●				●	●	●	●	●		
D	●						●	●	●			

Description

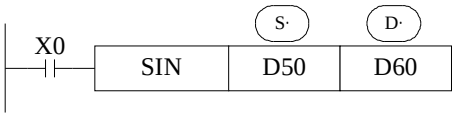

(D51,D50) → (D61,D60)SIN

Binary Floating Binary Floating

- This instruction performs the mathematical SIN operation on the floating point value in S (angle RAD). The result is stored in D.

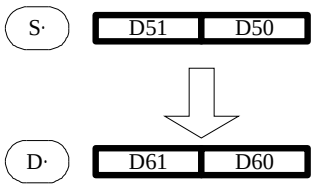

RAD value (angle× π /180)

Assign the binary floating value

SIN value

Binary Floating

4-9-9. Cosine[SIN]

1. Summary

Float Cosine[COS]			
16 bits	-	32 bits	COS
Execution condition	Normally ON/OFF, rising/falling edge	Suitable Models	XC2.XC3.XC5.XCM
Hardware requirement	-	Software requirement	-

2. Operands

Operands	Function	Data Type
S	Soft element address need to do cos	32 bits, BIN
D	Result address	32 bits, BIN

3. Suitable soft components

Word

Operands	System									Constant	Module	
	D	FD	ED	TD	CD	DX	DY	DM	DS	K/H	ID	QD
S	●	●				●	●	●	●	●		
D	●						●	●	●			

Description

(D51,D50)RAD → (D61,D60)COS

Binary Floating Binary Floating

- This instruction performs the mathematical COS operation on the floating point value in S (angle RAD). The result is stored in D。

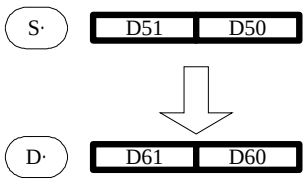

RAD value (angle× π/180)

Assign the binary floating value

COS value

Binary Floating

4-9-10. TAN [TAN]

1. Summary

TAN [TAN]			
16 bits	-	32 bits	TAN
Execution condition	Normally ON/OFF, rising/falling edge	Suitable Models	XC2.XC3.XC5.XCM
Hardware requirement	-	Software requirement	-

2. Operands

Operands	Function	Data Type
S	Soft element address need to do tan	32bit,BIN
D	Result address	32bit,BIN

3. Suitable soft components

Word

Operands	System									Constant	Module	
	D	FD	ED	TD	CD	DX	DY	DM	DS	K/H	ID	QD
S	●	●				●	●	●	●	●		
D	●						●	●	●			

Description

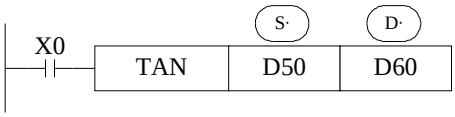

(D51,D50)RAD → (D61,D60)TAN

Binary Floating Binary Floating

- This instruction performs the mathematical TAN operation on the floating point value in S. The result is stored in D.

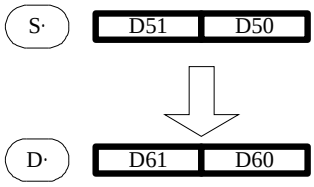

RAD value (angle× π/180)

Assign the binary floating value

TAN value

Binary Floating

4-9-11. ASIN [ASIN]

1. Summary

ASIN [ASIN]			
16 bits	-	32 bits	ASIN
Execution condition	Normally ON/OFF, rising/falling edge	Suitable Models	XC2.XC3.XC5.XCM
Hardware requirement	V3.0 and above version	Software requirement	-

2. Operands

Operands	Function	Data Type
S	Soft element address need to do arcsin	32 bits, BIN
D	Result address	32 bits, BIN

3. Suitable soft components

Word

Operands	System									Constant	Module	
	D	FD	ED	TD	CD	DX	DY	DM	DS	K/H	ID	QD
S	●	●				●	●	●	●	●		
D	●						●	●	●			

Description

(D51,D50)ASIN → (D61,D60)RAD
Binary Floating Binary Floating

- This instruction performs the mathematical ASIN operation on the floating point value in S. The result is stored in D.

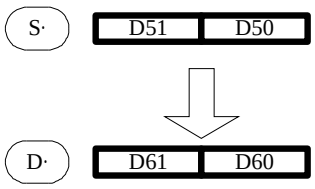

ASIN value
Binary Floating

RAD value (angle× π/180)
Assign the binary floating value

4-9-12. ACOS [ACOS]

1. Summary

ACOS [ACOS]			
16 bits	-	32 bits	ACOS
Execution condition	Normally ON/OFF, rising/falling edge	Suitable Models	XC2.XC3.XC5.XCM
Hardware requirement	V3.0 and above	Software requirement	-

2. Operands

Operands	Function	Data Type
S	Soft element address need to do arccos	32 bits, BIN
D	Result address	32 bits, BIN

3. Suitable soft components

Word

Operands	System									Constant	Module	
	D	FD	ED	TD	CD	DX	DY	DM	DS	K/H	ID	QD
S	●	●				●	●	●	●	●		
D	●						●	●	●			

Description

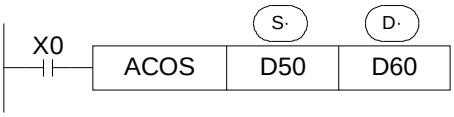

(D51,D50)ACOS → (D61,D60)RAD

Binary Floating Binary Floating

- Calculate the arcos value(radian), save the result in the target address

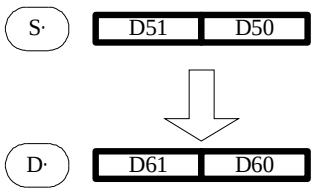

TCOS value

Binary Floating

RAD value (angle× π/180)

Assign the binary floating value

4-9-13. ATAN [ATAN]

1. Summary

ATAN [ATAN]			
16 bits	-	32 bits	ACOS
Execution condition	Normally ON/OFF, rising/falling edge	Suitable Models	XC2.XC3.XC5.XCM
Hardware requirement	V3.0 and above	Software requirement	-

2. Operands

Operands	Function	Data Type
S	Soft element address need to do arctan	32 bit, BIN
D	Result address	32 bit, BIN

3.Suitable soft components

Word

Operands	System									Constant	Module	
	D	FD	ED	TD	CD	DX	DY	DM	DS	K/H	ID	QD
S	●	●				●	●	●	●	●		
D	●						●	●	●			

Description

(D51,D50)ATAN → (D61,D60)RAD

Binary Floating Binary Floating

- Calculate the arctan value (radian), save the result in the target address

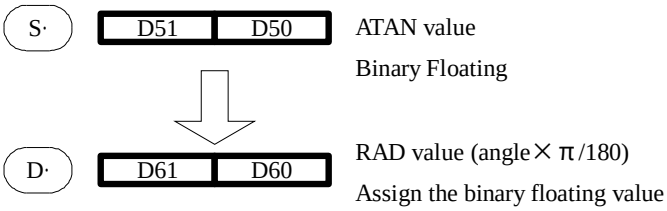

4-10. RTC Instructions

Mnemonic	Function	Chapter
TRD	Clock data read	4-10-1
TWR	Clock data write	4-10-2

※1: To use the instructions, The Model should be equipped with RTC function;

4-10-1. Read the clock data [TRD]

1. Instruction Summary

Read the clock data:

Read the clock data: [TRD]			
16 bits	TRD	32 bits	-
Execution condition	Normally ON/OFF, rising/falling edge	Suitable Models	XC2.XC3.XC5.XCM
Hardware requirement	V2.51 and above	Software requirement	-

2. Operands

Operands	Function	Data Type
D	Register to save clock data	16 bits, BIN

3. Suitable Soft Components

Word

Operands	System									Constant	Module	
	D	FD	ED	TD	CD	DX	DY	DM	DS	K/H	ID	QD
D	●			●	●							

Functions And Actions

The current time and date of the real time clock are read and stored in the 7 data devices specified by the head address D.

- Read PLC's real time clock according to the following format.

The reading source is the special data register (D8013~D8019) which save clock data.

	Unit	Item	Clock data		Unit	Item
Special data register for real time clock t	D8018	Year	0-99	→	D0	Year
	D8017	Month	1-12	→	D1	Month
	D8016	Date	1-31	→	D2	Date
	D8015	Hour	0-23	→	D3	Hour
	D8014	Minute	0-59	→	D4	Minute
	D8013	Second	0-59	→	D5	Second
	D8019	Week	0 (Sun.)-6 (Sat.)	→	D	Week

4-10-2. Write Clock Data [TWR]

1. Instruction Summary

Write the clock data:

Write clock data [TRD]			
16 bits	-	32 bits	TRD
Execution condition	Normally ON/OFF, rising/falling edge	Suitable Models	XC2.XC3.XC5.XCM
Hardware requirement	V2.51 and above	Software requirement	-

2. Operands

Operands	Function	Data Type
S	Write the clock data to the register	16 bits, BIN

3. Suitable Soft Components

Word

Operands	System									Constant	Module	
	D	FD	ED	TD	CD	DX	DY	DM	DS	K/H	ID	QD
S	●	●		●	●	●	●	●	●			

Functions And Actions

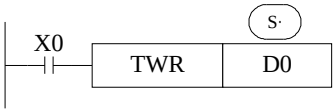

The 7 data devices specified with the head address S are used to set a new current value of the real time clock.

- Write the set clock data into PLC's real time clock.
  In order to write real time clock, the 7 data devices specified with the head address (S·) should be pre-set.

Data for clock setting

Unit	Item	Clock data
D10	Year	0-99
D11	Month	1-12
D12	Date	1-31
D13	Hour	0-23
D14	Minute	0-59
D15	Second	0-59
D16	Week	0 (Sun.)-6 (Sat.)

Special data register for real time clock t

Unit	Item
D8018	Year
D8017	Month
D8016	Date
D8015	Hour
D8014	Minute
D8013	Second
D8019	Week

After executing TWR instruction, the time in real time clock will immediately change to be the new set time. So, when setting the time it is a good idea to set the source data to a time a number of minutes ahead and then drive the instruction when the real time reaches this value.